ITEM NUMBER:	

FOR UNTOLERANCED DIMENSIONS SEE ISO 2768-1: DESIGNATION
FOR GENERAL TOLERANCE ON WELDED CONSTRUCTIONS SEE ISO 13920: CLASS
FOR GENERAL TOLERANCE ON MOULDED/CASTING PARTS SEE ISO 8062-1:

2D STATUS	IN WORK
ESR No.	

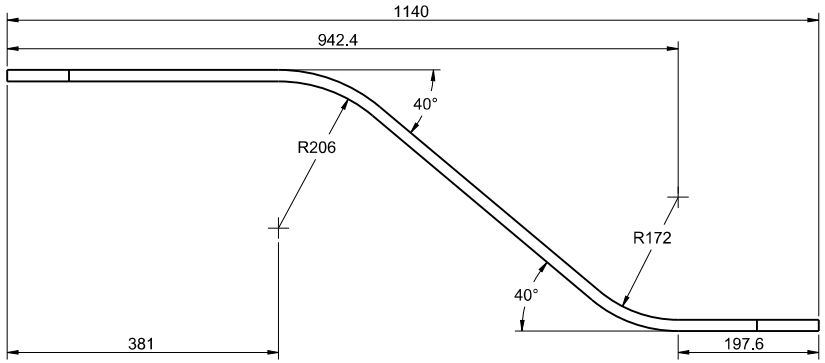

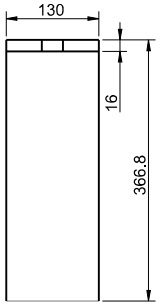

engineering
Transnet Ltd Reg. No. 1990/00900/06

16 March 2026
Durban
Configuration

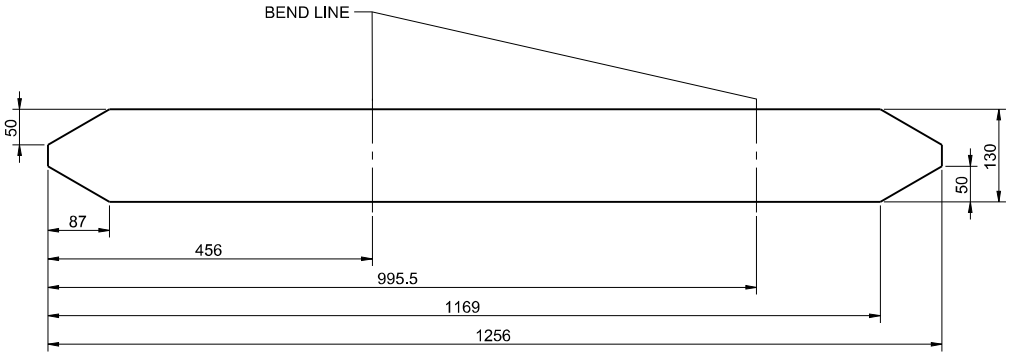

DEVELOPED VIEW
SCALE 1:5

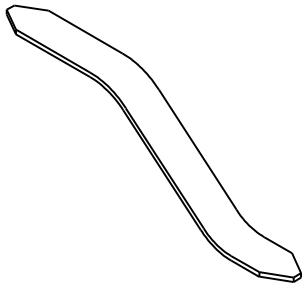

NOTE

6.3 ALL OVER EXCEPT WHERE OTHERWISE INDICATED

REMOVE ALL SHARP EDGES

-/A DEVELOPED VIEW ADDED 13/03/2026 R.K.K	
REV/AMD ECN Doc. No.	
REV/AMD DATE	13/03/2026
AMENDMENTS	
MASS	19.42 Kg

COPYRIGHT
THIS DRAWING TOGETHER WITH THE COPYRIGHT IS THE PROPERTY OF
TRANSNET
THIS DRAWING OR ANY PART THEREOF IS NOT TO BE COPIED OR OTHERWISE REPRODUCED OR USED FOR MANUFACTURE OR ANY OTHER PURPOSE WITHOUT THE WRITTEN PERMISSION FROM
CHIEF EXECUTIVE,
TRANSNET ENGINEERING

ASSEMBLY DRG No. TWK18449 IT 2,18453 IT 2	DRAWN	L.W.	
	CHECKED	C.C.	
CLASS	APPROVED	D.P.L.	
TYPE	DATE	2012/08/20	
	SCALE	1:1	
TECH SPEC Doc No.			

A-2 PROJECTION

KOEDOESPOORT PRODUCT DEVELOPMENT

BRACE, REAR

FOR SIDE FRAME ASSY

SHEET 1 OF 1

TRANSNET ENGINEERING

No. TWK18491 REV. A

MATERIAL

STEEL
EN 10025-2:2004 S355JR-AR
FLAT 16X130
1256