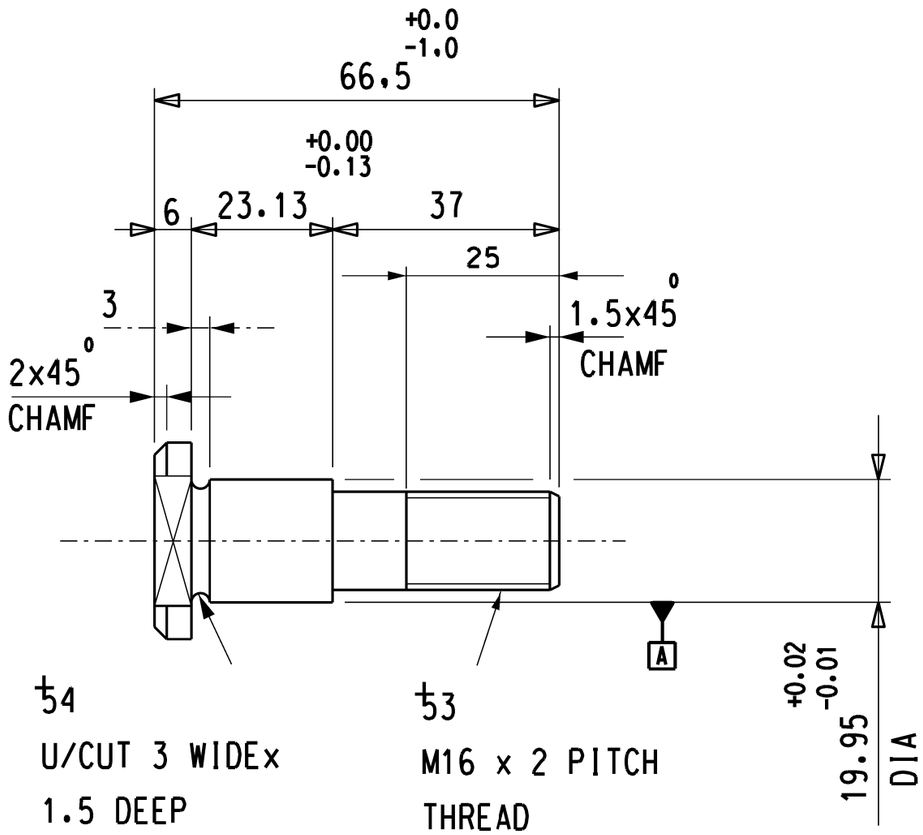

SIDE ELEVATION

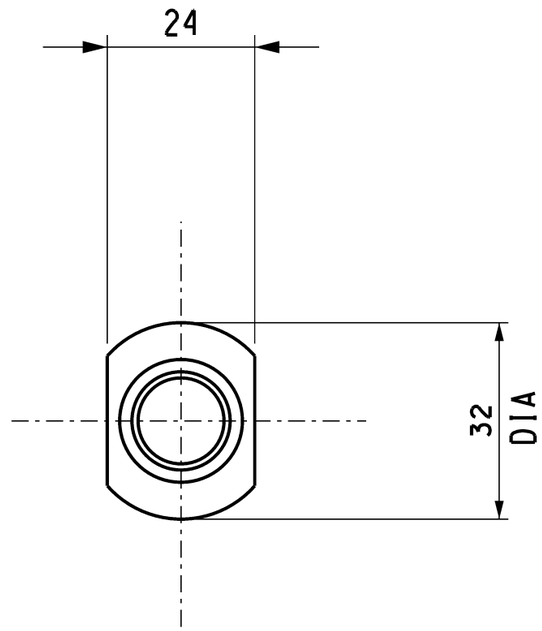

END ELEVATION

MATERIAL: BRIGHT MILD STEEL (EN 8)

BOLT SURFACE FINISH TO SABS 0111 3.2

WEIGHT: 0.25 kg

56

D.O.	REV	DATE	REVISION	REV BY	CHKD BY	AUTH BY	KKS APP	REFERENCE DRAWINGS
00	0		FIRST ISSUE					

INDEX REFERENCE :

DRG REGISTR		
KKS APP	17 06 98	C.M.Leach
AUTH BY		
CHKD BY		
DRAWN BY	17 06 98	C.M.Leach
SCALE	1:1	

ESKOM

APPROVED BY : E. VIVIERS

MATIMBA POWER STATION
DUST HANDLING PLANT
SPECIAL CAM ROLLER BOLT
SHEET 5 OF 7

20-58/ 55578

REV 00

SIZE GROOTTE A3L