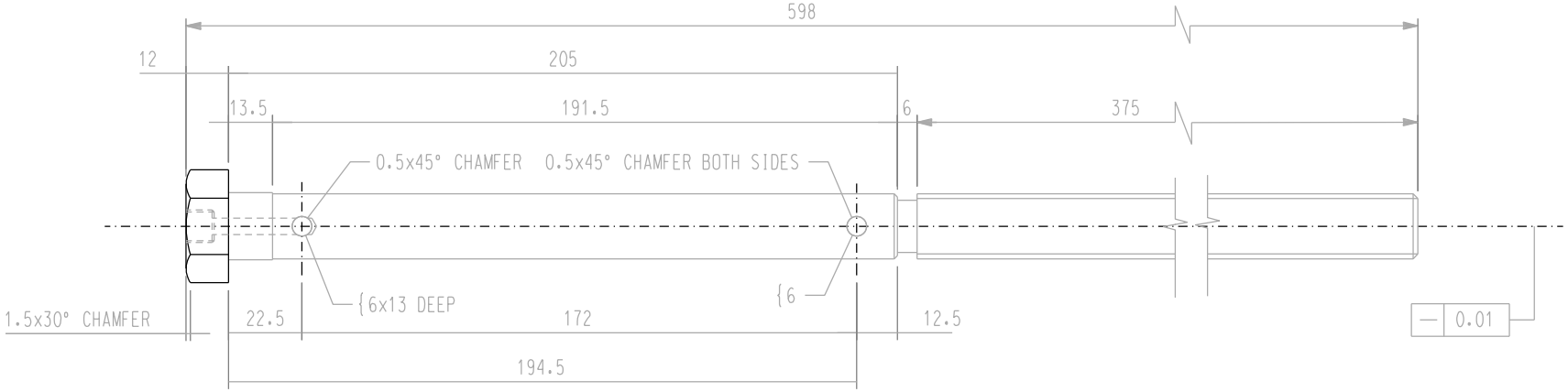

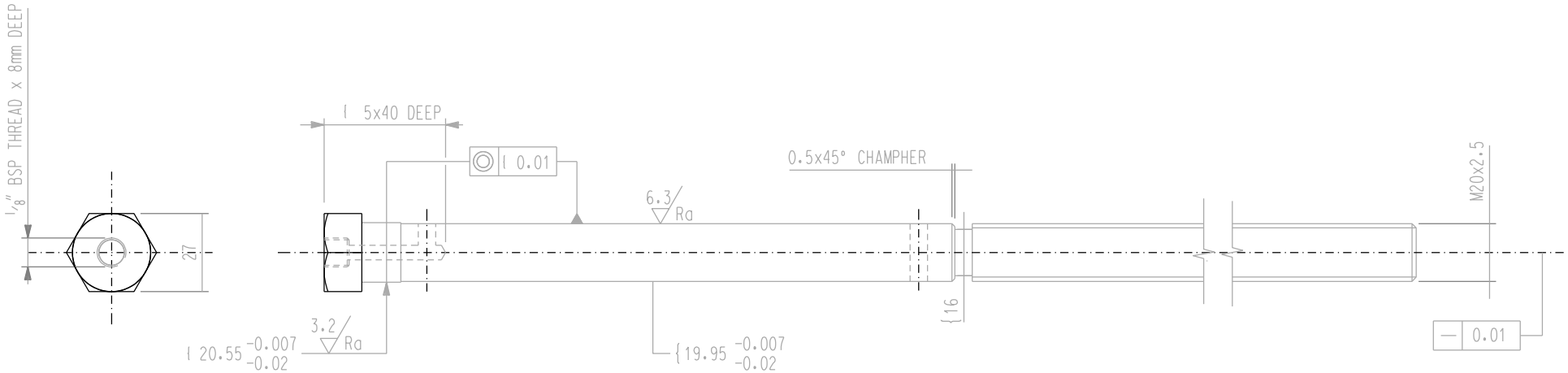

GENERAL NOTES:

1. MATERIAL: 316 STAINLESS STEEL.
2. ALL UNSPECIFIED RADII TO BE 0.5mm.
3. FINISHED ITEM TO BE PASSIVATED USING NITRIC ACID:
   -15% NITRIC ACID @ 60°C FOR 20-30 MIN, FOLLOWED BY A THOROUGH WATER WASH.

THIS DRAWING HAS BEEN CREATED ON A C.A.D. SYSTEM.
ANY AMENDMENT MUST BE EFFECTED ON THE SAME SYSTEM.

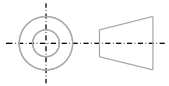

D.O.	REV	DATE	REVISION	REV BY	CHKD BY	AUTH BY	KKS APP	REFERENCE DRAWINGS
ØØ	Ø		FIRST ISSUE					
			INDEX REFERENCE :					Ø.

DRG REGISTR	27 03 06	M.M	APPROVED BY : W.H. PRETORIUS 08/03/06
KKS APP	Ø9 03 06	B.M	AUTHORISED
AUTH BY	17 03 06	H. v V	
CHKD BY	Ø9 03 06	R.H	
DRAWN BY	Ø8 03 06	R.V	
SCALE	1:1.5		

MATIMBA POWER STATION
VOLUMETRIC COAL FEEDER
BELT PULLEY SCREW
FABRICATION DETAILS

Eskom

20.58/55Ø28

REV ØØ

SIZE GROOTTE A3L