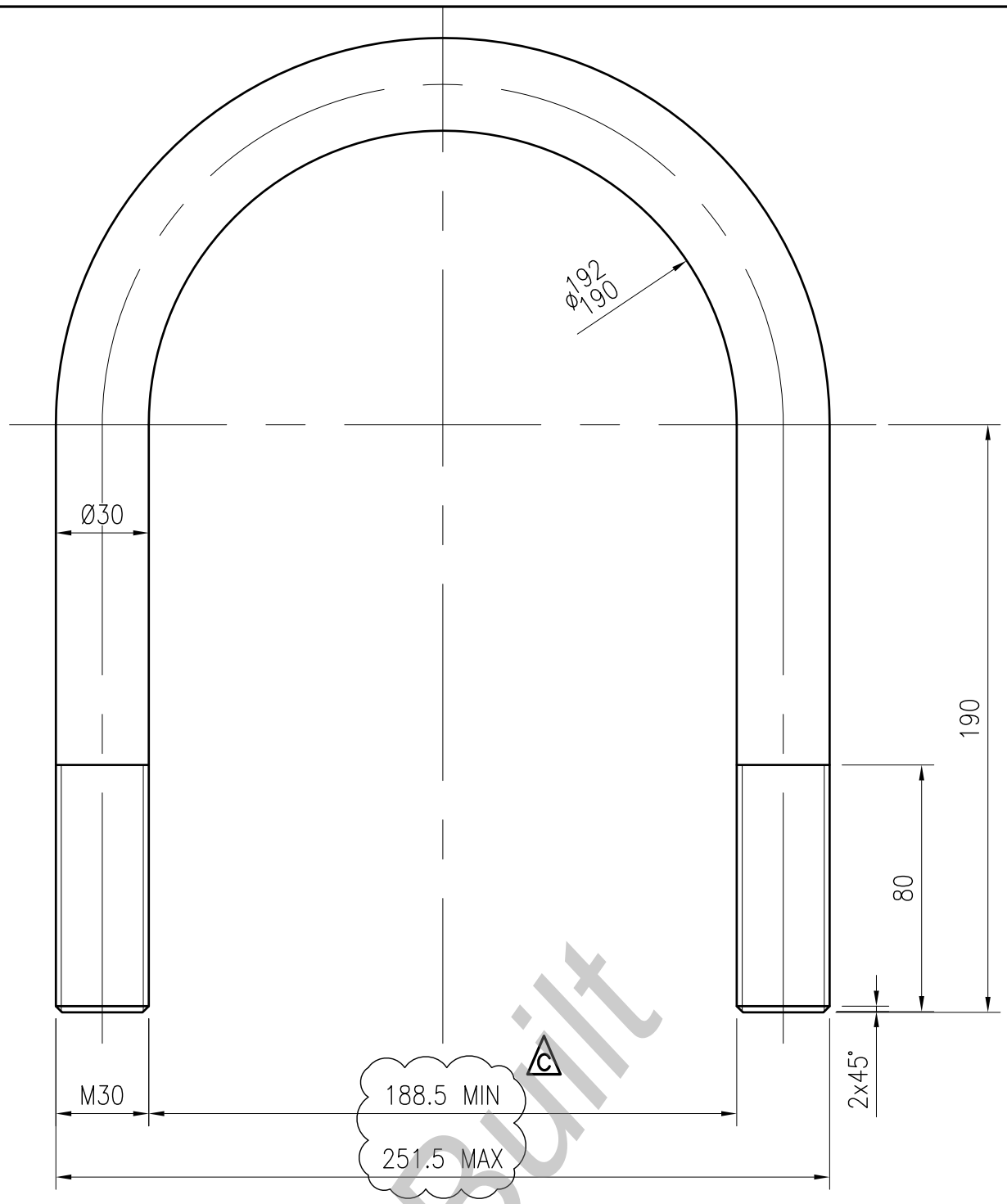

SIDE ELEVATION
(SCALE 1:2)

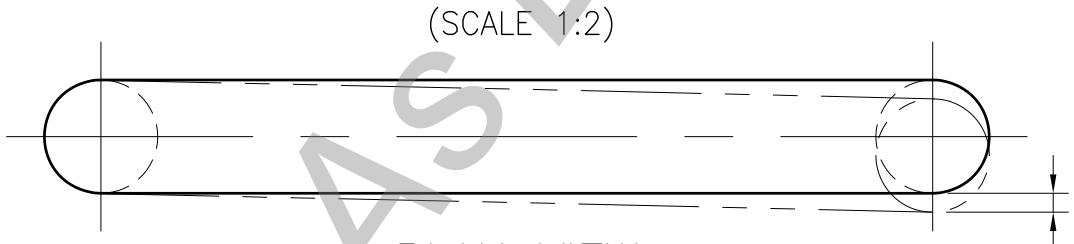

PLAN VIEW
(SCALE 1:2)

As Built

NOTES:
1. U-BOLT TO BE HOT DIPPED GALVANIZED

ITEM	DESCRIPTION	QTY	MATERIAL/REMARKS/DRAWING NO.
1	U-BOLT	16	Ø30 R.BAR BS 970 709 M40 COND 'T'

SPACE FOR STAMPING

D.O.	REV	DATE	** REVISION ** / INDEX REFERENCE :	STATUS	REV BY	CHKD BY	AUTH BY	KKS APP	REFERENCE DRAWINGS	
	E	26.11.09	CHANGES AS PER ESKOM DOCUMENT No. 257-21821	RFC	S.E.	J.H.V.	P.B.			
	D	16.09.09	CHANGES AS PER ESKOM DOC. No. 257-17855	RFC	R.F.	S.E.	P.B.	-		
	C	15.07.09	CHANGED BOLT TOLERANCES	RFC	S.E.	J.H.V.	P.B.	-		
	B	01.07.09	CHANGES AS PER ESKOM DOCUMENT 257-14272	RFC	S.E.	J.H.V.	P.B.	-	2	MDI/16/N/MAG---B05/DD/038
00	A	26.08.08	FIRST ISSUE	DRAFT	S.E.	J.H.V.	P.B.	-	1	MDI/16/N/MAG---B05/EA/003

			AUTHORISED FOR ESKOM BY	DATE
DRG REGISTR	-	-		
DESIGN APPROVED	26.08.08	P.B.		
KKS APP	-	-		
DO AUTH	26.08.08	P.B.		
CHKD BY	26.08.08	J.H.V.		
DRAWN BY	25.06.08	S.E.		
SCALE	1:2			

Howden
ALSTOM | POWER SYSTEMS PLANT BUSINESS
Eskom Enterprises

MEDUPI POWER STATION
AIR COOLED CONDENSER
DETAIL OF U-BOLT

08.D.19411.017

MDI/16/N/MAG----B05/DD/043 RFC

0.84/4135

SHEET 1 OF 1 REV 5