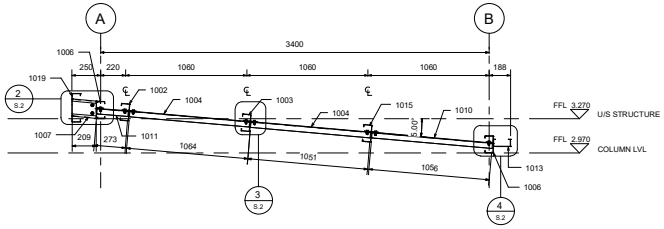

1 SAG BAR ELEVATION
1 : 20

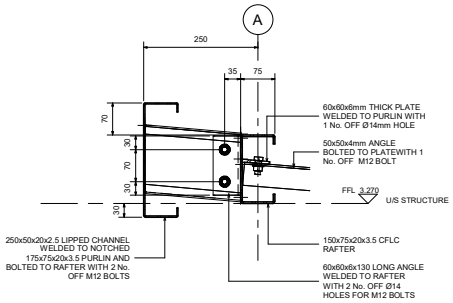

2 DETAIL A
1 : 5

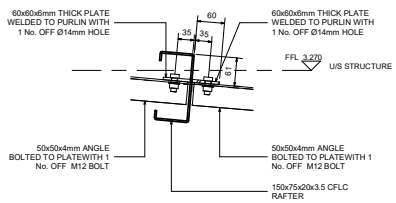

3 DETAIL B
1 : 5

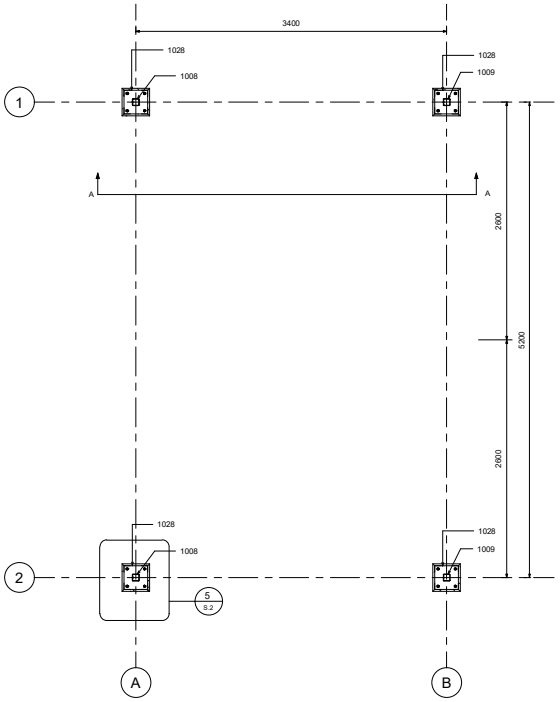

B SECTION B-B
1 : 25

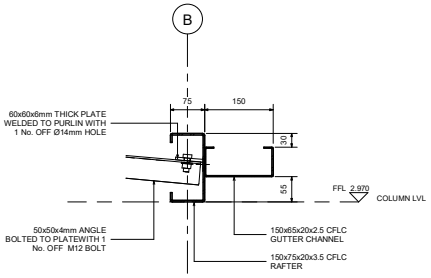

4 DETAIL C
1 : 5

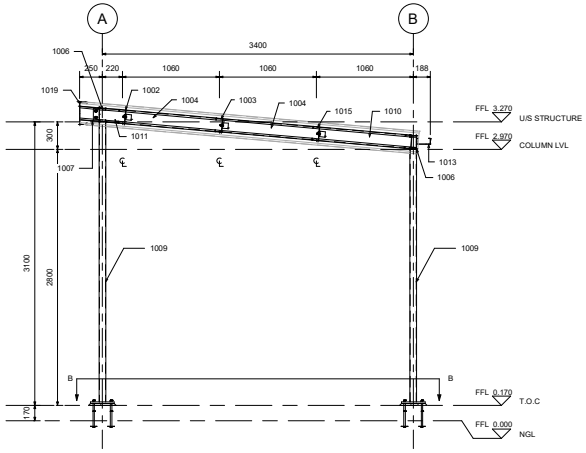

A SECTION A-A
1 : 25

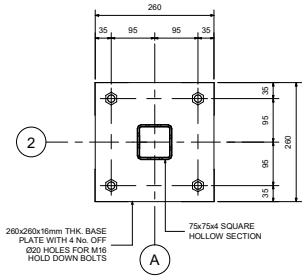

5 DETAIL D
1 : 5

REVISIONS					
REV	DATE	BY	DESCRIPTION	CHK	APD

NOTES

1. ABRASIVE BLAST CLEAN TO SA - 2 1/2 ALL STEELWORK. APPLY WITHIN 4 HOURS OF CLEANING APPROVED PRIMER AND PAINT

2. USE LINCOLN GREEN / ALOE FOR BOTH THE SHEETING AND STRUCTURAL STEEL AND NOT TRAFFIC GREEN.

COMPANY

IMC ENGINEERING CONSULTANTS

DRAWN BY: E TERBLANCHE

SIGNATURE: ..... DATE: ..... DESIGN BY

SIGNATURE: ..... DATE: ..... CHECKED BY

SIGNATURE: ..... DATE: ..... PROJECT MANAGER

AREA OF JURISDICTION: JOHANNESBURG

DESCRIPTION OF PROJECT: STANDBY GENERATOR

DRAWING TITLE: GENERAL ARRANGEMENT OF STEEL COVER DETAILS, PLANS, SECTIONS, ELEVATIONS & DETAILS

CLIENT APPROVAL: INITIALS AND SURNAME — SIGNATURE — DATE — CONTRACT No. :

OHS APPROVAL: INITIALS AND SURNAME — SIGNATURE — DATE — PROJECT No. : — SCALE : AS SHOWN

PROJECT STATUS: GENERAL ARRANGEMENT (DRAWING) — DESIGNER (DRAWING) — MANUFACTURING (DRAWING) — DEFINITIVE (DRAWING)

PROJECT ENGINEER: INITIALS AND SURNAME — SIGNATURE & Pr Eng NUMBER — DATE

COPYRIGHT RESERVED. NO USE, NOR REPRODUCTION NOR DUPLICATION THERE OF MAY OCCUR WITHOUT THE WRITTEN CONSENT OF THE COMPANY HEAD

REMARKS: ORIGINAL PAPER SIZE: A1

DRAWING No: R0 61270/200 — SHEET NO: 1 OF 1 — REVISION 0