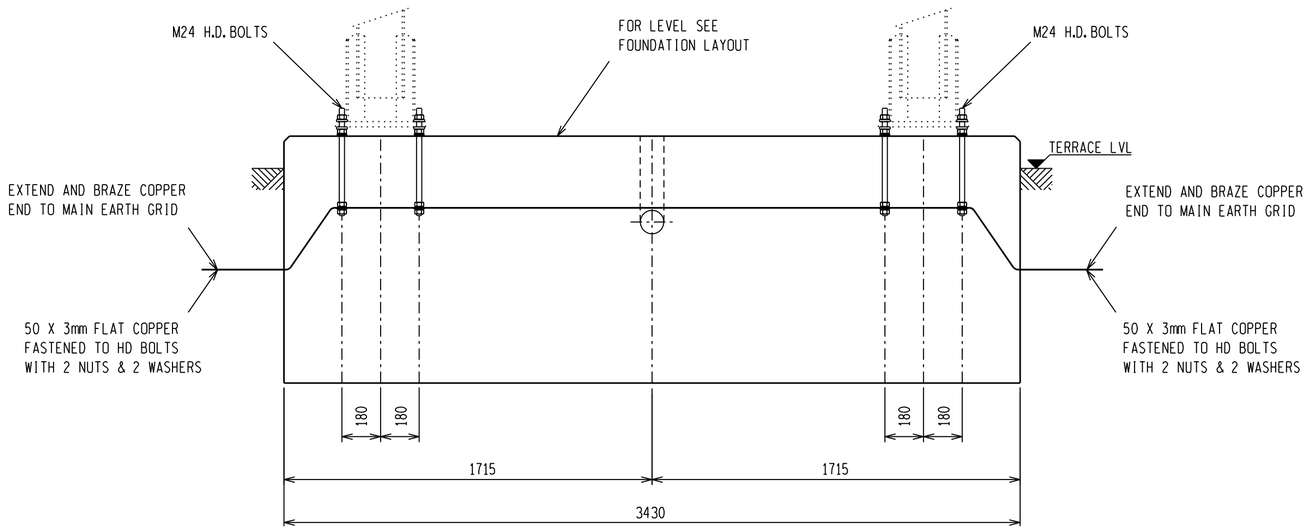

SECTION A-A

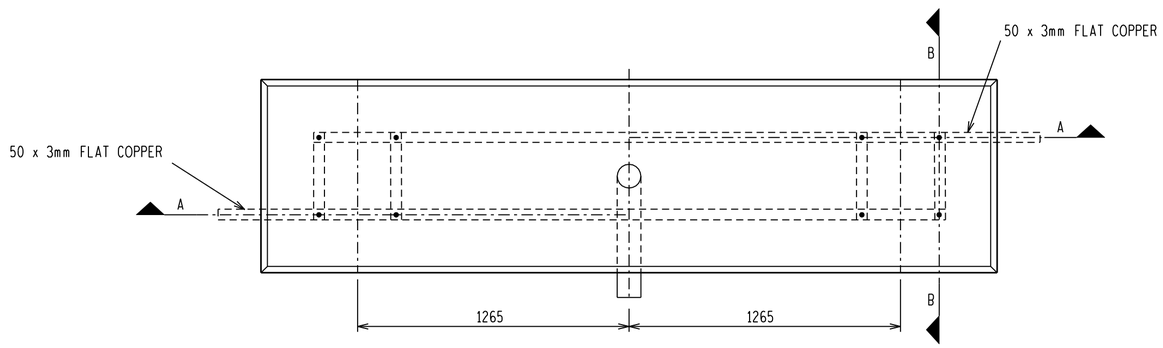

PLAN

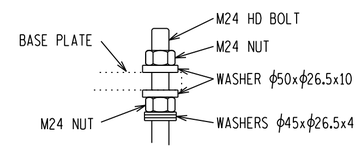

MOUNTING ARRANGEMENT OF
FRAME ON FOUNDATION
(NTS)

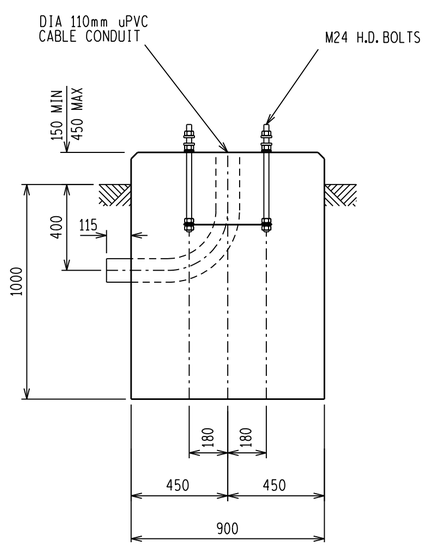

SECTION B-B

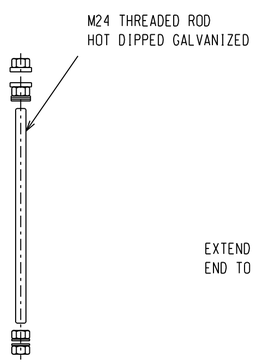

HD BOLT

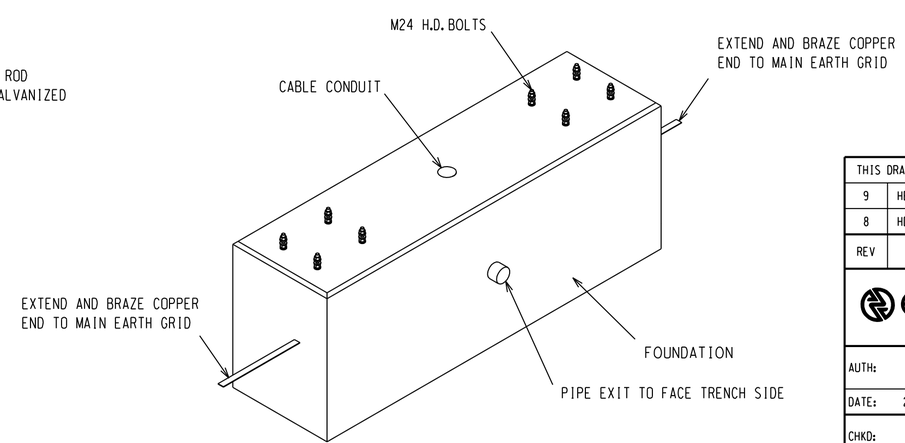

ISOMETRIC VIEW
(NTS)

NOTES:

1 CONCRETE WORK TO BE IN ACCORDANCE WITH SANS 1200.
2 CONCRETE STRENGTH AT 28 DAYS = 25MPa.
3 CONCRETE STRENGTH FOR BLINDING LAYER AT 28 DAYS = 15MPa.
4 ALL TOP EDGES OF FOUNDATION TO HAVE 25-35mm CHAMFER.
5 FOR HEIGHT OF FOUNDATION SEE FOUNDATION LAYOUT.
6 COMPACTION OF THE BOTTOM OF FOUNDATIONS SHALL BE COMPACTED TO 93% OF MOD. AASHTO.
7 DO NOT GROUT UNDER SUPPORT BASE PLATE.
8 OFF SHUTTER FINISH TO UPPER SIDES OF FOUNDATION TO EXTEND TO 100mm BELOW GROUND LEVEL.
9 ONLY STEEL SHUTTERING MAY BE USED.
10 ONLY STEEL TEMPLATE MAY BE USED FOR SETTING H.D. BOLTS.
11 BOLTS, NUTS & WASHERS TO BE IN ACCORDANCE WITH SANS 1700.
12 H.D. BOLTS AND NUTS TO PROTRUDE 130mm ABOVE FINISHED FOUNDATION LEVEL.
13 NON OXIDE PASTES MUST BE USED ON ALL EARTH CONNECTIONS TO H.D. BOLTS.
14 ALL EARTHING MUST CONFORM TO D-DT-5240.
15 FOR PRICING THE AVERAGE LENGTH OF 15m FLAT COPPER INCLUDE THE COPPER BETWEEN FOUNDATIONS AND MAIN EARTH GRID AND 2 X 3m TAILS. FLAT COPPER MUST HAVE A MINIMUM DEPTH OF 500mm.
16 NO CONCRETE TO BE POURED WHERE THE AIR TEMPERATURE WILL DROP BELOW 4 DEG CELSIUS IN 8 HOURS AFTER POURING OF CONCRETE UNLESS A SUITABLE APPROVED ADDITIVE IS ADDED TO THE CONCRETE MIXES.
17 THIS FOUNDATION IS ONLY FOR SOIL TYPE 1 AND 2.

HD BOLT SCHEDULE

BOLT SIZE mm	MILD STEEL GRADE	PITCH mm	LENGTH mm	NO OFF HD BOLTS	NO OFF NUTS	NO OFF WASHERS	TOTAL MASS kg	TORQUE Nm
24	4.8	3	500	8	32	32	18.42	359-407

SCHEDULE OF QUANTITIES @ 150mm
EXCAVATION VOLUME = 3.09m^3
CONCRETE VOLUME = 3.55m^3
SHUTTERING AREA = 2.17m^2
50x3mm FLAT COPPER = 20.25kg
CLASS 6 uPVC PIPE 110mm OD LENGTH 1m BENDING RAD 280mm

ITEM	HEIGHT (MAX)	WEIGHT (MAX)
TUBULAR SUPPORT	2.15m	242.39kg
EQUIPMENT	2.99m	1701kg
BEARING CAPACITY		
FOUNDATION = 150kPa	SOIL TYPE 1 & 2	

DRG NO.	SHEET NO:	REFERENCE DRAWINGS:
D-DT-5200	SHEET 2A	BREAKER SUPPORT DETAILS

THIS DRAWING IS THE NEW OFFICIAL REVISION AND IT SUPERSEDES ALL OTHER PUBLISHED DRAWINGS

REV	REVISION DESCRIPTION	BY	CHKD	AUTH	DATE	PROJECT NO.
9	HEIGHT & WEIGHT OF SUPPORT & EQUIPMENT ADDED	GJB	MDB	NMW	16/05/2013	
8	HD BOLT ARRANGMENT ADDED	GJB	NMW	BPH	15/05/2012	

Eskom

CIRCUIT BREAKER - 132kV
TUBULAR SUPPORT
FOUNDATION DETAILS - CABLE PIPE
(SOIL TYPE 1 & 2)

AUTH:	R GUSH
DATE:	29/09/1999
CHKD:	N WEBBER
DATE:	25/04/1999
DRAWN:	TMB
DATE:	20/04/1999

SAP No. 0182925
SCALE 1:20
THIS DRAWING IS THE PROPERTY OF ESKOM

D-DT-5200

SET	SHEET	REVISION
	1A	9

A2L

...\5200 Sheet 1A Rev 9.dgn 2013/05/16 10:42:20 AM