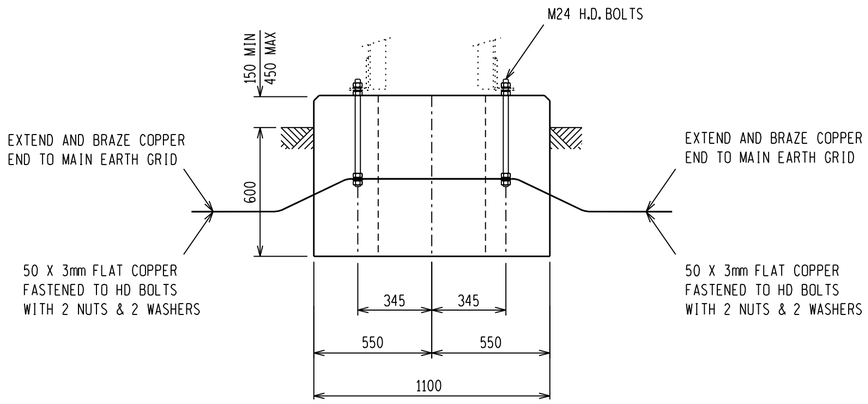

SECTION A-A

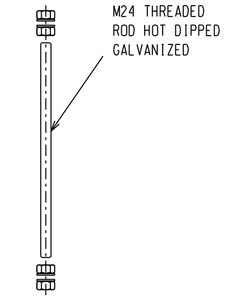

HD BOLT

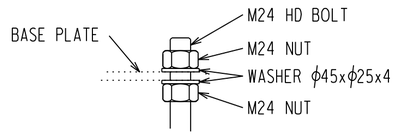

MOUNTING ARRANGEMENT OF FRAME ON FOUNDATION (NTS)

NOTES:

1 CONCRETE WORK TO BE IN ACCORDANCE WITH SANS 1200.
2 CONCRETE STRENGTH AT 28 DAYS = 25MPa.
3 CONCRETE STRENGTH FOR BLINDING LAYER AT 28 DAYS = 15MPa.
4 ALL TOP EDGES OF FOUNDATION TO HAVE 25-35mm CHAMFER.
5 FOR HEIGHT OF FOUNDATION SEE FOUNDATION LAYOUT.
6 COMPACTION OF THE BOTTOM OF FOUNDATIONS SHALL BE COMPACTED TO 93% OF MOD. AASHTO.
7 DO NOT GROUT UNDER SUPPORT BASE PLATE.
8 OFF SHUTTER FINISH TO UPPER SIDES OF FOUNDATION TO EXTEND TO 100mm BELOW GROUND LEVEL.
9 ONLY STEEL SHUTTERING MAY BE USED.
10 ONLY STEEL TEMPLATE MAY BE USED FOR SETTING H.D. BOLTS.
11 BOLTS, NUTS & WASHERS TO BE IN ACCORDANCE WITH SANS 1700.
12 H.D. BOLTS AND NUTS TO PROTRUDE 75mm ABOVE FINISHED FOUNDATION LEVEL.
13 NON OXIDE IS TO BE USED ON ALL EARTH CONNECTIONS TO H.D. BOLTS.
14 ALL EARTHING TO CONFORM TO D-DT-5240.
15 FOR PRICING THE AVERAGE LENGTH OF 15m FLAT COPPER INCLUDES THE COPPER BETWEEN FOUNDATION AND MAIN EARTH GRID AND 2 X 3m TAILS. FLAT COPPER TO HAVE A MININUM DEPTH OF 500mm.
16 NO CONCRETE TO BE POURED WHERE THE AIR TEMPRATURE WILL DROP BELOW 4 DEG CELCIUS IN 8 HOURS AFTER POURING OF CONCRETE UNLESS A SUITABLE APPROVED ADDITIVE IS ADDED TO THE CONCRETE MIX.
17 THIS FOUNDATION IS ONLY FOR SOIL TYPE 1 AND 2.

HD BOLT SCHEDULE								
BOLT SIZE mm	MILD STEEL GRADE	PITCH mm	LENGTH mm	NO OFF HD BOLTS	NO OFF NUTS	NO OFF WASHERS	TOTAL MASS KG	TORQUE Nm
24	4.8	3	500	4	16	16	9.21	359-407

SCHEDULE OF QUANTITIES @ 150mm
EXCAVATION VOLUME = $0.77m^3$
CONCRETE VOLUME = $0.97m^3$
SHUTTERING AREA = $1.50m^2$
50x3mm FLAT COPPER = 20.25kg

BEARING CAPACITY	
FOUNDATION = 150KPA	SOIL TYPE 1 AND 2

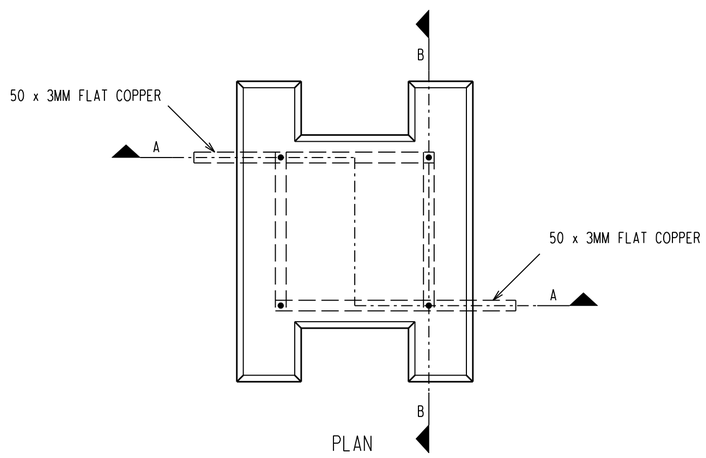

PLAN

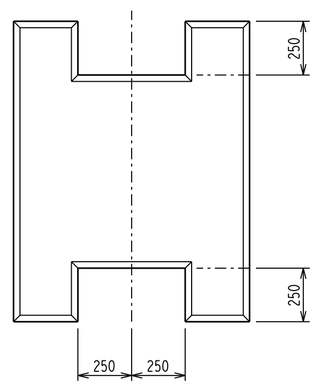

PLAN

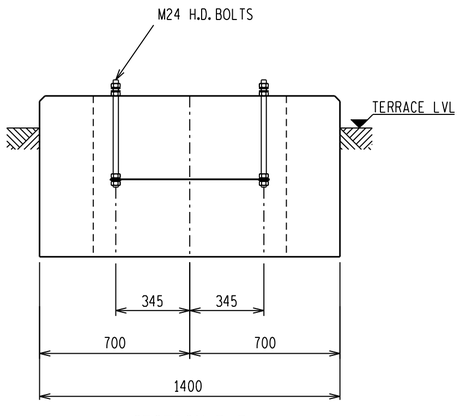

SECTION B-B

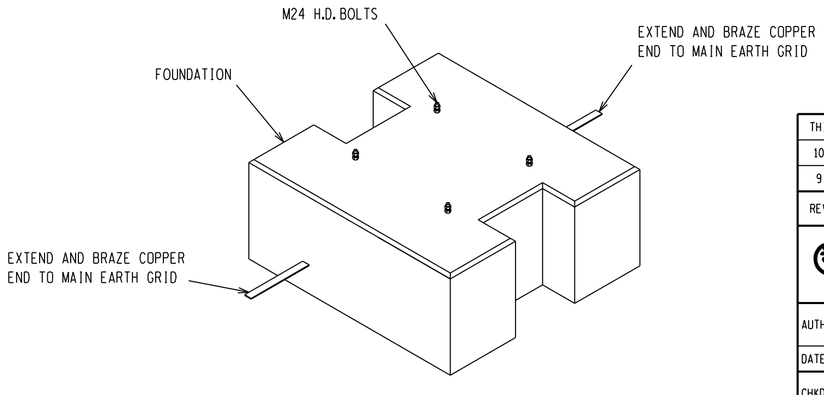

ISOMETRIC VIEW (NTS)

D-DT-5213	SHEET 2D	MV CSE 1 - 4 SINGLE CORE CABLES/PHASE
D-DT-5213	SHEET 2C	MV CSE 1 - 2 SINGLE CORE CABLES/PHASE
D-DT-5213	SHEET 2B	MV CSE 1X3 CORE 1-4 SINGLE CORE CABLE/PHASE
D-DT-5213	SHEET 2A	MV CSE 1 X 3 CORE CABLE
DRG NO.	SHEET NO:	REFERENCE DRAWINGS:

THIS DRAWING IS THE NEW OFFICIAL REVISION AND IT SUPERCEEDES ALL OTHER PUBLISHED DRAWINGS

REV	REVISION DESCRIPTION	BY	CHKD	AUTH	DATE	PROJECT NO.
10	HD BOLT ARRANGEMENT ADDED	GJB	NMW	BPH	15/05/2012	
9	REDRAWN, NOTES UPDATED	GJB	NMW	BPH	12/05/2011	

Eskom Distribution

AUTH: B P HILL
DATE: 22/08/2002
CHKD: N WEBBER
DATE: 01/03/2001
DRAWN: J F SCHOLTZ
DATE: 13/02/2001

MV CABLE SEALING END
LATTICE SUPPORT FOUNDATION DETAILS (SOIL TYPE 1 & 2)

SAP No. 0183996
SCALE 1:20
THIS DRAWING IS THE PROPERTY OF ESKOM

D-DT-5213	SET	SHEET	REVISION
		1A	10

A2L

...\5213 Sheet 1A Rev 10.dgn 2012/07/05 03:28:35 PM