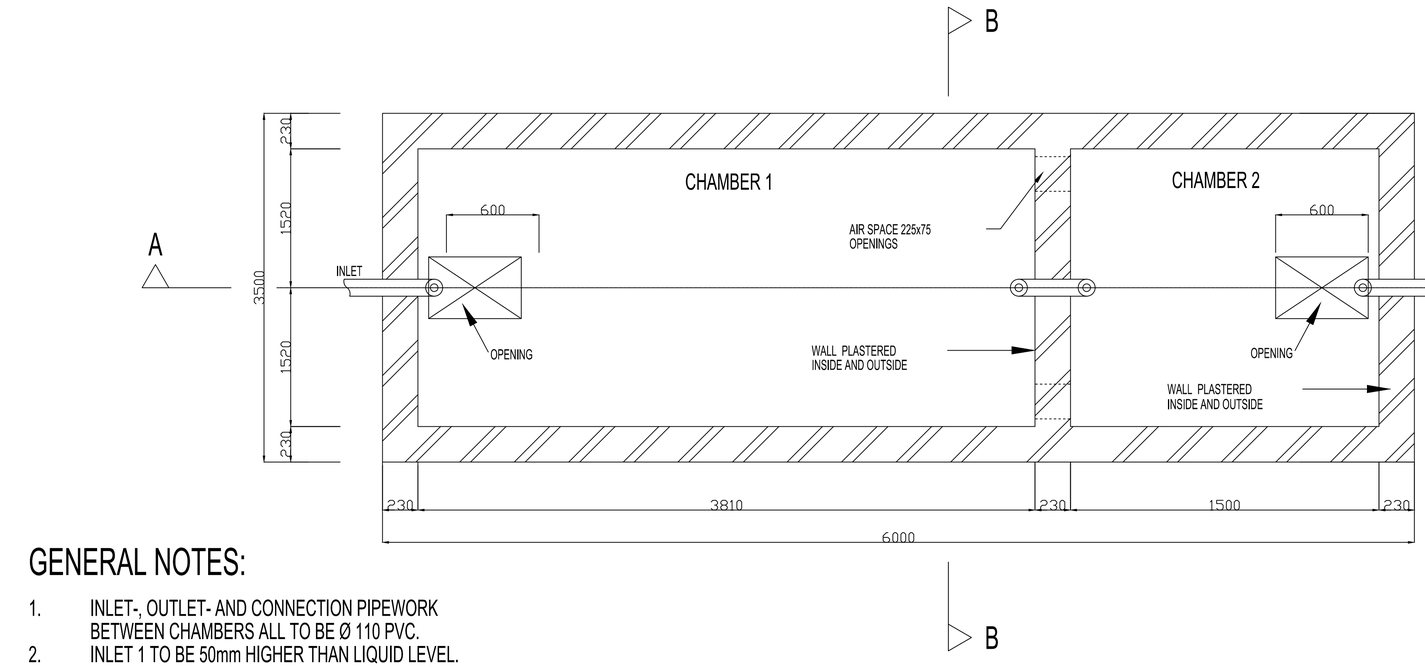

PLAN (SEPTIC TANK)

SCALE 1:25

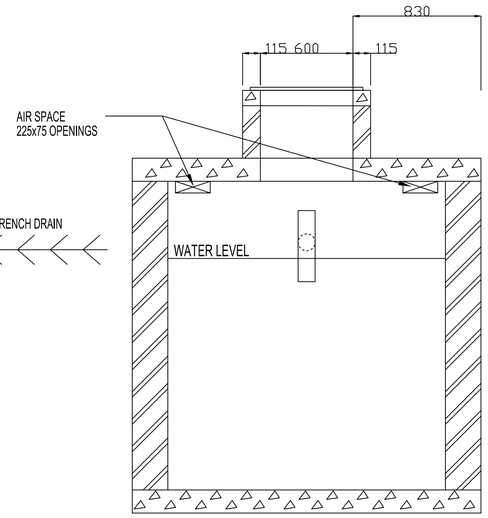

SECTION B-B

SCALE 1:25

GENERAL NOTES:

1. INLET-, OUTLET- AND CONNECTION PIPEWORK BETWEEN CHAMBERS ALL TO BE Ø 110 PVC.
2. INLET 1 TO BE 50mm HIGHER THAN LIQUID LEVEL.
3. EACH CHAMBER TO BE FITTED WITH A MANHOLE AND ELEVATED TO PREVENT INFLOW OF STORMWATER.
4. ALL WALLS TO BE DOUBLE BRICKWORK, PLASTERED AND CONSTRUCTED TO BE WATER PROOF.
5. BRICKFORCE EVERY THIRD LAYER.
8. SOIL TO BACKFILLED AND AND THOROUGHLY AROUND OUTSIDE OF TANK.

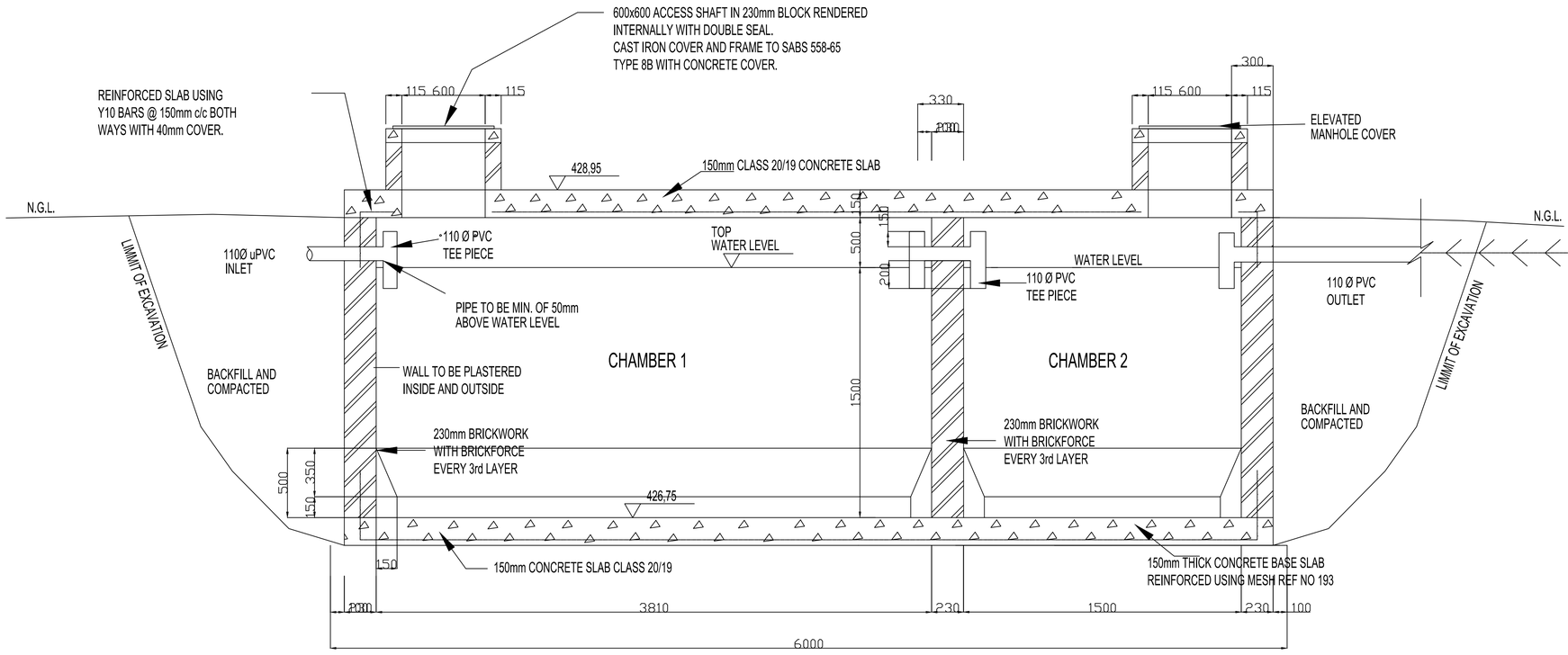

SECTION A-A

SCALE 1:25

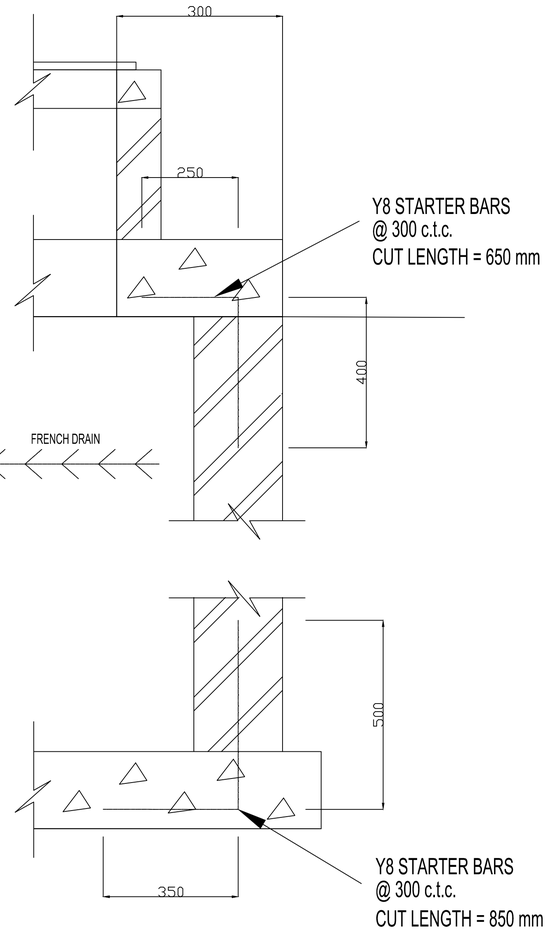

DETAIL OF STARTER BARS

SCALE 1:10

COPYRIGHT HELD BY :
NEMORANGO CONSULTING ENGINEERS cc
"Copyright subsists in this work. Any unauthorised reproduction in any manner or form, publication, making an adaptation of the work and doing in in relation to an adaptation of the work, any of the work, any of the acts above, are acts of copyright infringement and make the DOER liable for civil law copyright infringement and may make the DOER liable to criminal prosecution."

DRAWING REFERENCE

Drawing No.	Drawing Title

NOTES

ALL WORK IS TO BE DONE IN ACCORDANCE WITH THE NATIONAL BUILDING REGULATIONS.

ALL MATERIALS AND WORKMANSHIP ARE TO COMPLY WITH THE RELEVANT S.A.B.S CODES AND OR THE SPECIFIED INTERNATIONAL CODES WHERE APPLICABLE IN THE ABSENCE OF SUCH CODES THE WORK SHALL COMPLY WITH THE RELEVANT B.S. STANDARDS, BRITISH STANDARDS, BS CODES OF PRACTICE, OR AGREMENT CERTIFICATES APPLICABLE TO THE DESIGN EXISTS. THE RECOMMENDATIONS AND REQUIREMENTS OF SUCH DOCUMENTS TO BE CONSIDERED A MINIMUM STANDARD FOR THE WORKS.

THE CONTRACTOR SHALL IN ALL ASPECTS OF THE WORKS COMPLY WITH THE OCCUPATIONAL HEALTH AND SAFETY ACT OF 1993 (ACT 85 OF 1993) (ACT No 85 OF 1993) AND ANY REGULATIONS PROMULGATED IN TERMS IF THAT ACT OR THE FACTORIES MACHINERY AND BUILDING WORKS ACT OF 1941.

THE CONTRACTOR SHALL SET UP, DOCUMENT AND MAINTAIN A QUALITY ASSURANCE AND QUALITY CONTROL SYSTEM, IN ACCORDANCE WITH SANS 9001/ISO 9001, ABLE TO BE CHECKED TO THE SATISFACTION OF THE ENGINEER TO ENSURE THAT THE WORKMANSHIP WHATEVER THEIR SOURCES, MEET THE REQUIREMENTS OF THE SPECIFICATION. SHOULD THE CONTRACTOR OR ANY OF HIS SUB-CONTRACTORS BE CERTIFIED TO THE SANS 9000 FAMILY OF STANDARDS THEN MONITOR THESE WORKS ACCORDINGLY.

THIS DRAWING MUST BE READ IN CONJUNCTION WITH ALL THE RELEVANT DRAWINGS, SCHEDULES AND INFORMATION ISSUED FROM NEMORANGO AND ALL OTHER CONSULTANT RELATED TO THE PROJECT.

ALL PORTIONS OF THE WORKS RELATED TO ANY SERVICE OR CONSULTANTS INFORMATION IS TO BE DONE IN ACCORDANCE WITH THE NATIONAL BUILDING REGULATIONS.

THIS DRAWING IS NOT TO BE SCALED. FIGURED DIMENSIONS TO BE USED.
ALL DIMENSIONS ARE IN MILLIMETERS UNLESS OTHERWISE STATED.

ALL DIMENSIONS AND LEVELS MUST BE CHECKED ON SITE BY THE CONTRACTOR BEFORE PUTTING WORK IN HAND.

ALL WORK TO BE EXECUTED BY COMPETENT PERSONS QUALIFIED FOR THE SPECIFIC TRADE.

DRAWING AMENDMENTS

No.	Amendment	Date	Appr.
1	ISSUED FOR : CONSTRUCTION	AUG 2023	TM

Designed: E MUDAU	Date: AUG 2023
Checked: T RAPHALALANI	Date: AUG 2023
Drawn: E MUDAU	Date: AUG 2023
Client appr.	Date

Consultant
NEMORANGO CONSULTING ENGINEERS
CONSULTING ENGINEERS
e-mail : takalani@nemorango.co.za
(015) 295 2023 (015) 295 2024
10A HANS VAN RENSBURG POLOKWANE 0699
10A HANS VAN RENSBURG POLOKWANE 0699

Impl. Agent: THE MVULA TRUST — A leading developmental NGO; LIMPOPO PROVINCIAL GOVERNMENT REPUBLIC OF SOUTH AFRICA DEPARTMENT OF EDUCATION

Proj Name: CONSTRUCTION OF WATER & SANITATION INFRASTRUCTURE AT MODIPOANE SECONDARY SCHOOL IN LIMPOPO

Drawing Title: SEPTIC TANK

Proj Number	Drawing No.
TMT-LPDE-2019/20-LPCL5-04	TMT-LPDE-2019/20-LPCL5-04-002

Scale	Rev No.
N.T.S.	0