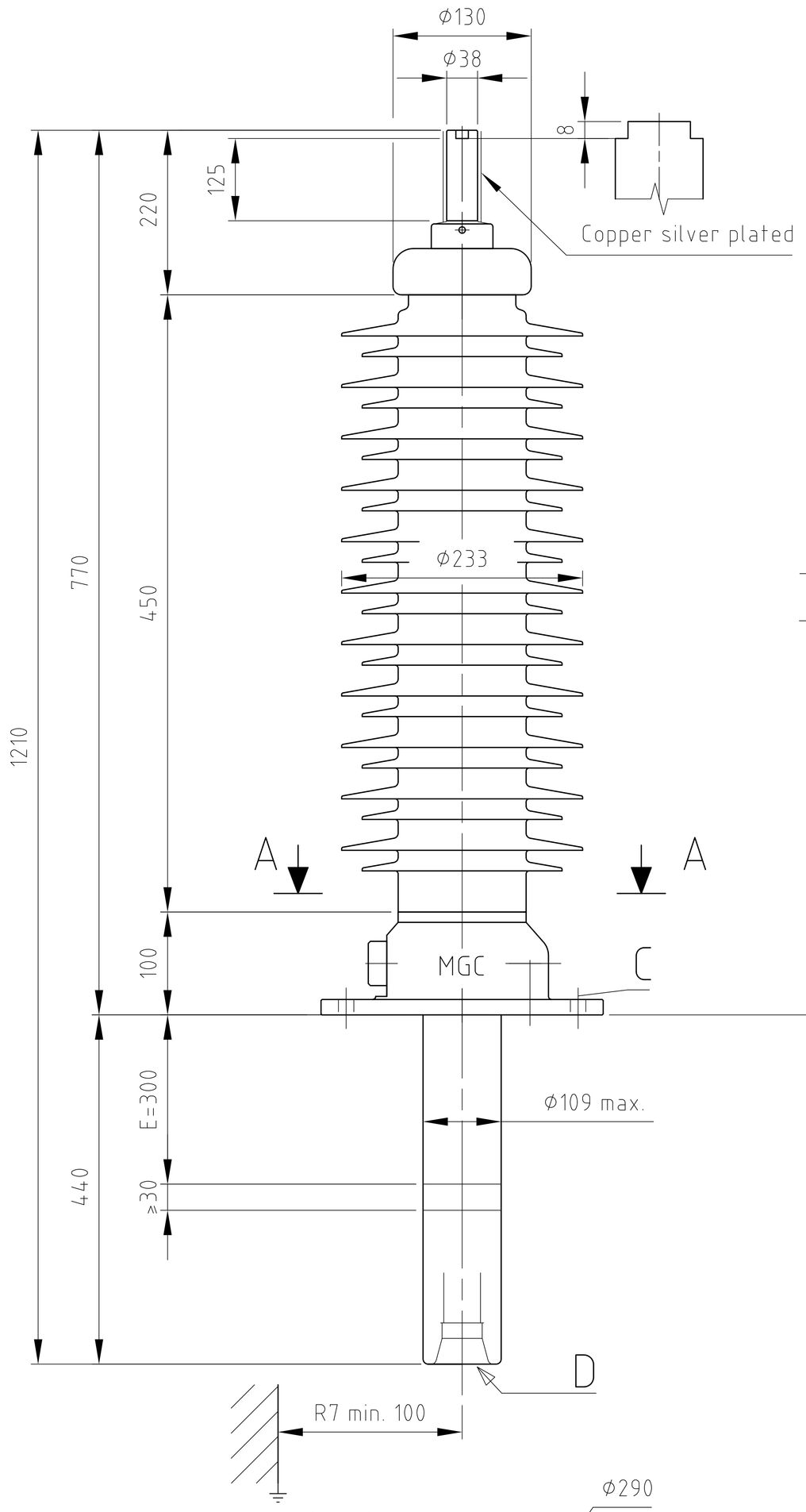

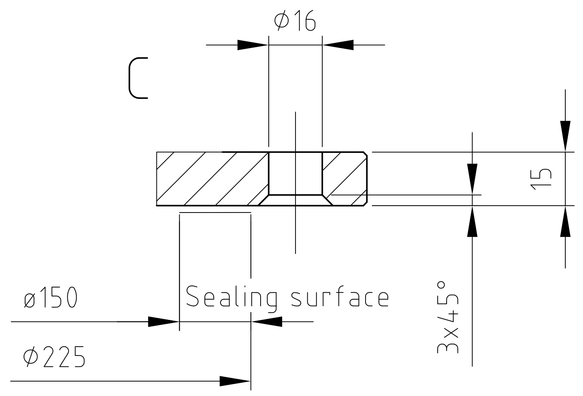

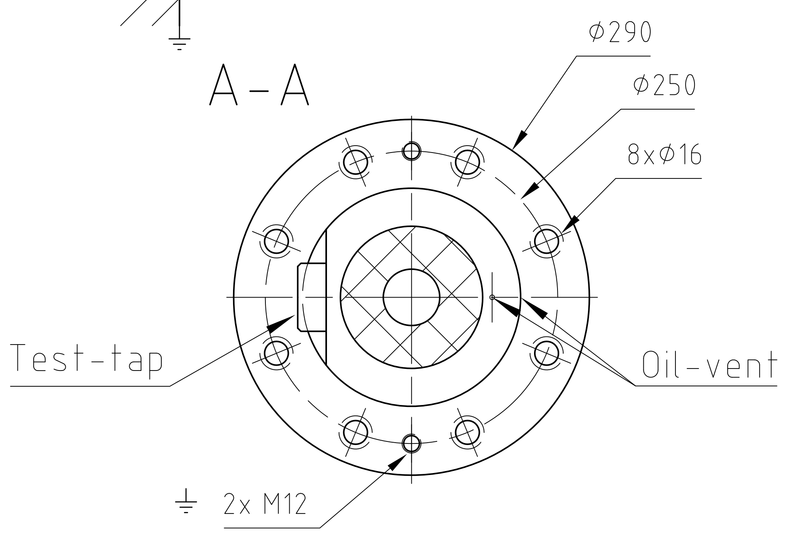

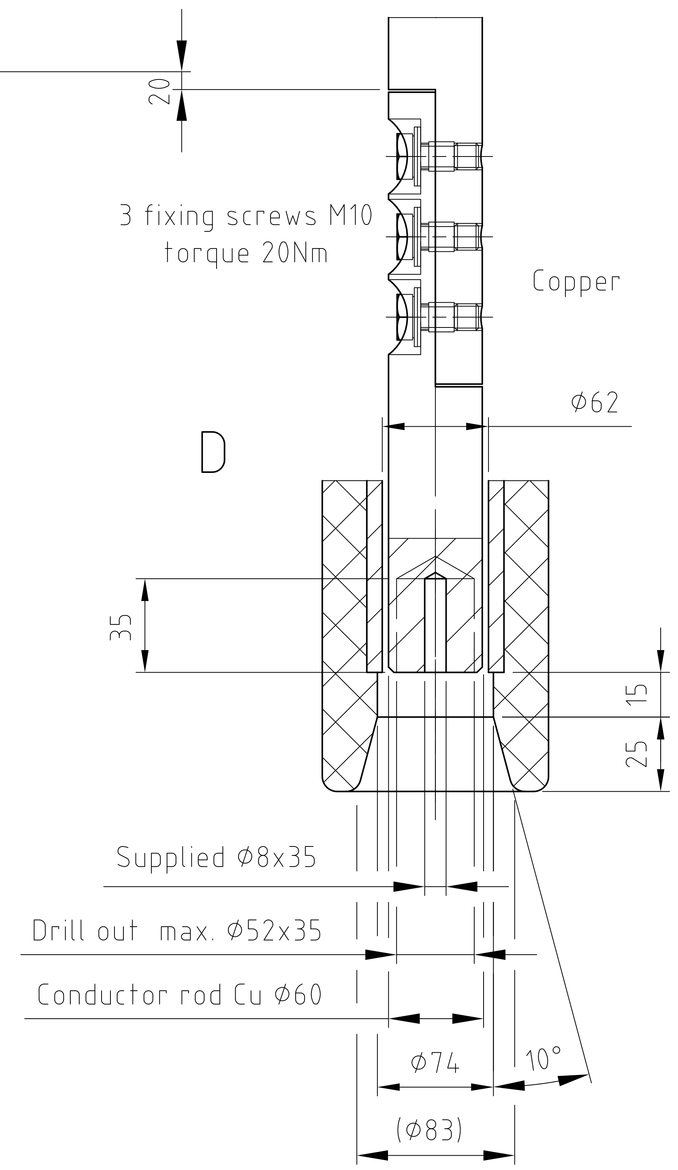

Test-tap

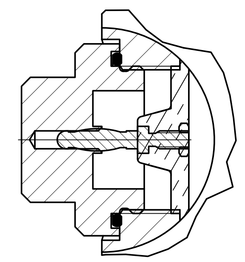

Design Characteristics

Insulation body		Resin Impregnated Paper (RIP)
Insulator		Silicone light grey
Connection to transformer winding		Removable copper conductor
Top terminal		B03=Cu-Ag
CT extension E		300 mm
Head / Flange		Made of corrosion free aluminium alloy
Test tap (AC test)	50Hz/1min.	2 kV
Weight		49 kg

Technical Data

According to		IEC 60137:2008
System voltage (Un)		33-44 kV
Rated voltage (Ur)		52 kV
Rated frequency (fr)		50 Hz
Power frequency voltage withstand (AC)	50Hz/1min.	Dry 105 kV
		Wet 95 kV
Lightning impulse Withstand voltage (BIL)	1,2/50µs	250 kV
Switching impulse (SIL)	250/2500µs	- kV
Max. rated current (Ir)		2500 A
Rated thermal short-time current (Ith)	t=3s	63 kA
Rated dynamic current (Id)		160 kA
Partial discharge level	1.05 Um/ √3	≤ 5pC

Operating Conditions

Installation altitude		1800m above sea level
Ambient temperature		-40 / +40° C
Oil temperature	Max.	100° C
	Max. daily mean	90° C
Mounting angle		0 - 90°
Creepage distance	Specific creepage distance	31mm/kV of highest voltage
Min. creepage distance		1612 mm
Min. cantilever test load	IEC 60137 class II	2500 N / 60s

Tol. as per DIN ISO 2768-1 (c)

Page: 1

FORMAT: A3

SCALE: 1:10

	DATE	NAME
Creat.	26.11.2014	smu
Check	13.06.2017	ymu
Appr.	13.06.2017	nst

www.mgc.ch

REV.	DESCRIPTION	DATE	NAME
B	Install. altitude / SIL	13.06.2017	ymu
A	Flange ø16	15.12.2016	nst

MOSER GLASER
Current and voltage – our passion

DTOI oil-outdoor bushing
52kV / 2500A
E=300 / Cu-Ag / ø290/250/109

DRAWING NO. 610.14.0090

REVISION B