NOTE:

KERBING CONCRETE, 15/19 MPA AT 28 DAYS CAST IN SITU BETWEEN POST-FOOTINGS & FINISHED 10 mm ABOVE GROUND LEVEL AS SHOWN.

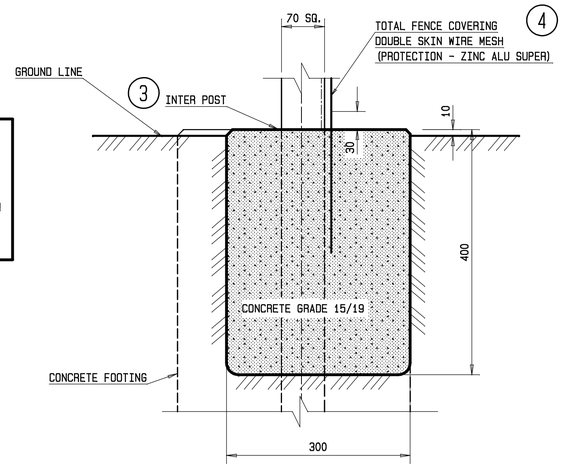

SECTION 01-01 INNER FENCE

KERBING DETAILS

SCALE 1:5

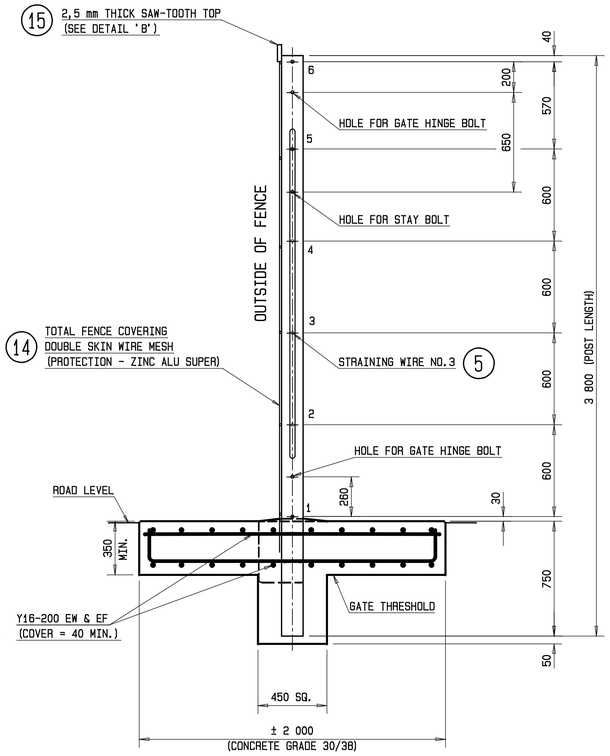

SECTION 02-02 GATE POST (INNER FENCE)

SCALE 1:20

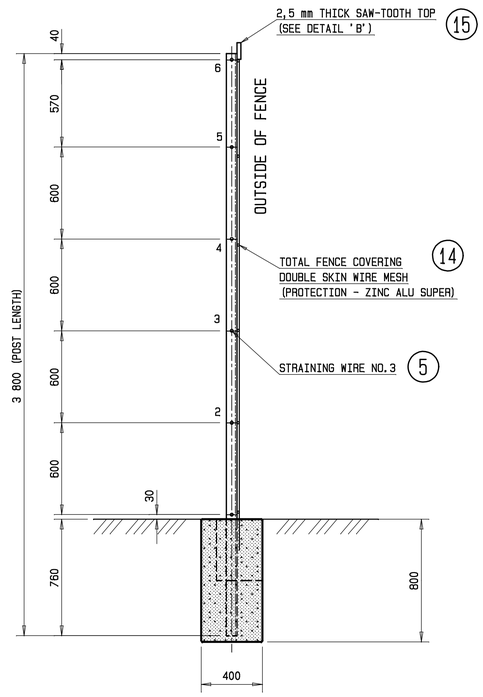

SECTION 03-03 INTER POST (INNER FENCE)

SCALE 1:20

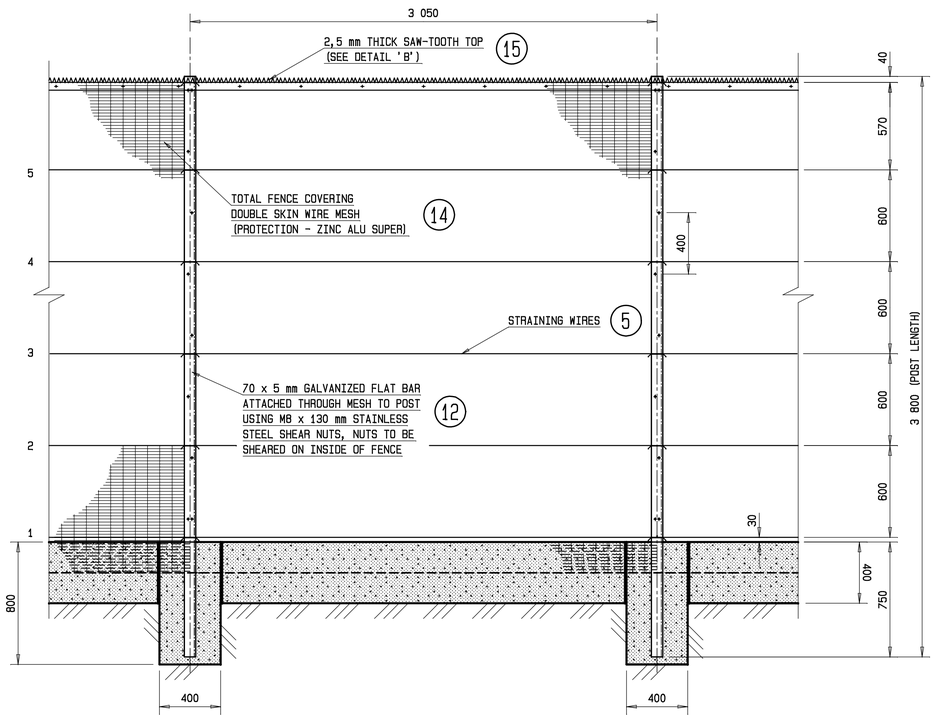

TYPICAL WELDED MESH PANEL FENCE HORIZONTAL INSTALLATION INNER FENCE

SCALE 1:20

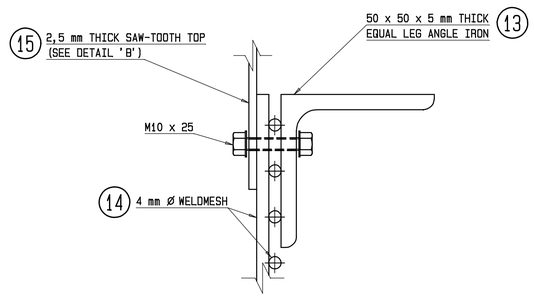

TOP RAIL DETAIL

SCALE 1:1

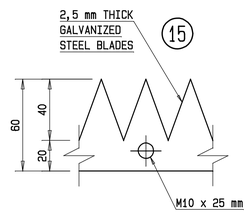

DETAIL 'B'

(SAW-TOOTH TOP)

SCALE 1:2

CONCRETE GRADES:

1. GATE-TRESHOLD: 30/38.
2. POST-FOOTINGS: 15/19.
3. STAY-FOOTINGS: 15/19.
4. KERBING: 15/19.

SCALE 1:1 — 0 0,01 0,02 0,03 0,04 0,05 0,1 0,2 m

SCALE 1:2 — 0 0,05 0,1 0,15 0,2 0,4 m

SCALE 1:5 — 0 0,05 0,1 0,2 0,3 0,4 0,5 1 m

SCALE 1:20 — 0 0,5 1 1,5 2 4 m

SHEET	DESCRIPTION	OTHER No.	REG. No.
4/4	3 m FENCE: MATERIALS LIST		167 769/13
2/4	3 m FENCE: HINGED GATE		167 767/13
1/4	3 m FENCE FOR IMPORTANT WORKS		167 766/13

LIST OF DRAWINGS

REVISION				
MOD No.	DATE	DESCRIPTION	FOR	DWA

DEPARTMENT OF WATER AFFAIRS
REPUBLIC OF SOUTH AFRICA

HEAD OFFICE
CIVIL ENGINEERING
PRIVATE BAG X313
PRETORIA 0001

SEDIBENG BUILDING
185 SCHOEMAN STREET
PRETORIA
(012) 336-7500

M. SIRENYA
DIRECTOR GENERAL

DESIGN: J.C. SWANEPOEL
DRAWN: J.C. SWANEPOEL
CHECKED: DATE:
ENGINEER: DATE:
EXTERNAL APPROVAL: DATE:
CHIEF ENGINEER / APP (Pr. Eng): DATE:
DIRECTOR (Pr. Eng): DATE:

TYPE

TYPE DRAWING:

3 m HIGH FENCE FOR IMPORTANT WORKS
DETAILS

PROVINCE:
DISTRICT:
KEYCODES: TYP FDG SER - - -
OTHER NUMBER
LOCALITY No.: ZZZZ-03
TENDER/ CONTRACT No. -
CALCULATION FILE: ZZZZ-03
SHEET 3 OF 4
REG. No. 167 768/13
REV. 00