Eskom	Standard	Distribution

Title:	**KIPTS NATURAL AGEING AND POLLUTION PERFORMANCE TEST PROCEDURE FOR OUTDOOR INSULATOR PRODUCTS: SECTION 5 - PARTICULAR REQUIREMENTS FOR OUTDOOR MV CABLE TERMINATIONS**	Unique Identifier:	**240-75661195**
		Alternative Reference Number:	**34-211**
		Area of Applicability:	**Engineering**
		Next Review Date:	**STABILIZED**

Compiler/Requestor	**Authorised by**
Amish Roopnarain	**Faith Mokhonoana**
Engineer	**Senior Manager: LES (Acting)**
Date: 09/12/2021	Date: 09/12/2021
Supported by SCOT/SC	**DBOUS Acceptance**
Faith Mokhonoana	**Amelia Mtshali**
SCOT/SC Chairperson	**Senior Manager: DBOUS**
Date: 09/12/2021	Date: 09/12/2021

This document is **STABILIZED**. All comments received have been addressed. The technical content in this document is not expected to change because the document covers: *(Tick applicable motivation)*

1	A specific plant, project or solution	
2	A mature and stable technical area/technology	X
3	Established and accepted practices.	

Motivation for Stabilizing:

KIPTS currently is in construction and as soon as it will be ready these documents will be revised and published according to the new KIPTS

PCM Reference: **240-151017656**
SCOT Study Committee Number/Name: **Dx Insulator CG**

Eskom	Standard	Technology

Title:	**KIPTS NATURAL AGEING AND POLLUTION PERFORMANCE TEST PROCEDURE FOR OUTDOOR INSULATOR PRODUCTS: SECTION 5 – PARTICULAR REQUIREMENTS FOR OUTDOOR MV CABLE TERMINATIONS**	Unique Identifier:	**240-75661195**
		Alternative Reference Number:	**34-211**
		Area of Applicability:	**Engineering**
		Documentation Type:	**Standard**
		Revision:	**2**
		Total Pages:	**13**
		Next Review Date:	**May 2021**
		Disclosure Classification:	**Controlled Disclosure**

Compiled by	Approved by	Authorized by
Kaveer Ramharak	Gavin Strelec	Riaz Vajeth
Engineer	Chief Engineer	Senior Manager Lines Engineering Services
Date: 25/4/2016	Date: 25/4/2016	Date:

Supported by SCOT/SC

Riaz Vajeth

SCOT/SC Chairperson

Date:

PCM Reference: **240-51017656**

SCOT Study Committee Number/Name: **Dx Insulator CG**

Content

Figures

ESKOM COPYRIGHT PROTECTED

When downloaded from the WEB, this document is uncontrolled and the responsibility rests with the user to ensure it is in line with the authorized version on the WEB.

1. Introduction

Currently, a wide variety of insulator products are being used on the Eskom Distribution system. These insulating products are exposed to diverse environmental conditions, which include high pollution levels (marine, industrial, sugar cane, etc.), frequent wetting cycles, ultra-violet radiation and variable wind conditions.

The accelerated ageing test as per SANS 61109, Annex C was specified in the past to obtain an indication of the performance of insulator products under simulated environmental conditions. Research performed at Koeberg Insulator Pollution Test Station (KIPTS) indicated that SANS 61109, Annex C does not adequately simulate the diverse environmental conditions that exist in South Africa. The Distribution Group has therefore embarked on a philosophy of natural ageing and pollution performance type testing to account for these factors in the evaluation of insulator products.

This document is part of a multi-part document under Part 0 of the Distribution Standard titled “KIPTS natural ageing and pollution performance test procedure for outdoor insulator products “consisting of the following sections:

240-100495413: Section 0, General requirements.

240 - 75881756: Section 1, Particular requirements for post, longrod and stand-off insulators.

240 - 75881784: Section 2, Particular requirements for through wall bushings.

240 - 75882042: Section 3, Particular requirements for surge arresters.

240-100495417: Section 4, Particular requirements for switch-disconnectors.

240 - 75661195: Section 5, Particular requirements for medium voltage cable terminations.

240 - 75661213: Section 6, Particular requirements for other insulator products

2. Supporting clauses

2.1 Scope

This document describes the specific requirements that are required by Distribution for the pollution performance evaluation of medium-voltage outdoor cable terminations.

This document shall be read in conjunction with 240-100495413: Section 0, General requirements.

2.2 Normative/informative references

Parties using this document shall apply the most recent edition of the documents listed in the following paragraphs.

[1] 240-100495413, Distribution Standard Part 0: KIPTS Natural ageing and pollution performance test procedure for outdoor insulator products. Section 0 – General requirements.

[2] DSP 34-1624, Distribution Standard Part 22: Specification for 11kV and 22kV impregnated paper and XLPE-insulated cables.

[3] NRS 012, Cable terminations and live conductors within air-filled enclosures (insulation co-ordination) for rated a.c. voltages from 7,2 kV and up to and including 36 kV.

[4] NRS 053 Edition 2, Accessories for medium-voltage power cables (3,8/6,6 kV to 19/33 kV).

[5] SANS 97, Electric cables – Impregnated-paper-insulated metal-sheathed cables for rated voltages 3,3/3,3 kV up to 19/33 kV.

[6] SANS 1339, Electric cables – Cross-linked polyethylene (XLPE)- insulated cables for voltages from 3,8/6,6 kV to 19/33 kV.

ESKOM COPYRIGHT PROTECTED

When downloaded from the WEB, this document is uncontrolled and the responsibility rests with the user to ensure it is in line with the authorized version on the WEB.

[7] IEC 60055-1, Paper-insulated metal-sheathed cables for rated voltages up to 18/30 kV (with copper or aluminium conductors and excluding gas pressure and oil filled cables) – Part 1: Tests on cables and their accessories.

[8] SANS 60502-4, Power cables with extruded insulation and their accessories for rated voltages from 1 kV (U_m = 1,2 kV) up to 30 kV (U_m = 36 kV) – Part 4: Test requirements on accessories for cables with rated voltages from 6 kV (U_m = 7,2 kV) up to 30 kV (U_m = 36 kV).

[9] SANS 61109, Composite insulators for a.c. overhead lines with a nominal voltage greater than 1000V.

2.3 Definitions

2.3.1 General

All definitions in 240-100495413 and the normative references shall apply.

2.3.2 Disclosure classification

Controlled disclosure: controlled disclosure to external parties (either enforced by law, or discretionary).

2.4 Abbreviations

All abbreviations as defined in 240-100495413 and the normative references shall apply.

3. Requirements

Nothing in this specification shall lessen the obligations of the supplier as detailed in any other documents forming part of an enquiry document.

3.1 General

a) The test procedure focuses on testing of the external insulation of the cable termination and provides a natural ageing and pollution performance test that is intended to replace the salt fog test required by IEC 60055-1 and SANS 60502-4.

b) The terminations to be tested shall be in accordance with NRS 053. However, they shall have a termination tail length of 650mm (as defined in NRS 012), two rain sheds per individual core and a tri-shed near the crutch. Torque shear connector lugs shall be used. Terminations that do not comply with these requirements shall be disqualified and shall not be tested.

Note: The tri-shed is applicable to terminations for paper-insulated cable only.

c) Termination components (specifically with outer core tubing, rain sheds and break-out boot) shall be fully marked by the manufacturer in accordance with the requirements of NRS 053. Terminations supplied with unmarked outer core tubing, rain sheds and break-out boots shall be disqualified and shall not be tested.

3.2 Samples and product grouping

a) A product group is considered to be a common group of cable terminations, from a specific manufacturer, that are manufactured from the same material (i.e. outer 'non-track' material for the trifurcating break-out boot, core tubing and rain sheds), utilises common technologies (e.g. heat-shrink, cold-shrink or slip-on) and have a common general design (e.g. common stress control design). The differences between products in a product group shall exist due to the modifications that are required to cater for different rated voltages, sizes of cables, external creepage distances, tail lengths and cable insulation media.

ESKOM COPYRIGHT PROTECTED

When downloaded from the WEB, this document is uncontrolled and the responsibility rests with the user to ensure it is in line with the authorized version on the WEB.

b) To obtain approval for terminations having a common technology (i.e. that are manufactured from the same outer material and share a common general design), two terminations suitable for a 50 mm^2 three-core cable shall be tested.

Note: Provided the requirements given in 2.2.1 are fulfilled, the following conditions regarding the scope/range of approval for a product group apply:

1) Tests carried out for a product group on a paper-insulated cable (in accordance with SANS 97) shall provide approval of that type of product group for use on XLPE-insulated cables (in accordance with SANS 1339). Tests carried out for a product group on XLPE-insulated cable, however, shall not provide approval for use of that type of product group on paper-insulated cables. This is due to the more onerous requirements of the sector shaped phase cores of a paper-insulated cable in accordance with SANS 97.

2) Tests carried out for a product group on a three-core cable shall provide approval of that product group for use on single-core cables. Tests carried out for a product group on a single-core cable, however, shall not provide approval for use of that product group on three-core cables.

3) Tests carried out for a product group at 22kV shall provide approval of that product group for 11kV. Tests carried out for a product group at 11kV, however, shall not provide approval of that product group for 22kV.

c) When a cable termination is submitted for testing the manufacturer shall stipulate in writing which part numbers form part of the product range.

3.3 Test Samples

a) Three samples shall be submitted per test item and shall include earthing kits, bills of materials and installation instructions. Two samples shall be used for the natural ageing and pollution performance test and the third sample shall be used to obtain material samples for the material analysis and artificial ageing test as described in 240-100495413 Section 0 – General requirements. The third sample shall also be stored for future reference.

b) The test samples to be used for the natural ageing and pollution performance test shall installed by the supplier onto a 5 m length of cable that complies with DSP 34-1624 (i.e. SANS 97 and SANS 1339 for paper-insulated and XLPE-insulated cables respectively). The test samples shall be installed as in service making sure that minimum clearances are maintained between phase cores. The cable support bracket as shown in figure A.1 (Annex A) shall be used for the KIPTS test installation. This support bracket makes provision for the attachment of second bracket as shown in figure A.2 for the mounting of the stand-off post insulators required for the support of each core of the termination.

c) For the purposes of measuring the relevant leakage currents and monitoring the electrical performance, provision shall be made for the installation of constant force springs around the outer tubing near the base of each core that will result in a total creepage distance (i.e. from the top of the core outer tubing to the top of the constant force spring including the two rain sheds) of 372mm for 11kV or 744mm for 22kV (i.e. a specific creepage of 31mm/kV). The constant force spring shall be positioned below the core sheds and above the tri-shed.

Note: The constant force springs and measuring equipment will be installed by the test station authority.

3.4 Test Procedure

a) Terminations not complying with the requirements stipulated in 2.1 shall be disqualified and shall not be tested.

b) The test procedure shall be in accordance with that specified in 240-100495413 Section 0 – General requirements.

c) The test shall be carried out for a full 12 month cycle (i.e. in accordance with a product having a specific creepage of 31mm/kV – resulting in a ‘heavy / very heavy’ product classification)

d) The test set-up configuration shall be as shown in figure 1.

ESKOM COPYRIGHT PROTECTED

When downloaded from the WEB, this document is uncontrolled and the responsibility rests with the user to ensure it is in line with the authorized version on the WEB.

Notes:

1) The steel support structures shall be earthed.

2) The main earth braid of each cable termination shall be earthed.

3) The constant force springs shall be installed in accordance with 2.3.3.

e) The termination #1 will be used for the purposes of the electrical performance as follows:

1) The constant force spring on core #1 shall be earthed via the leakage current signal box. A 750mA fuse shall be used on the line side of core #1.

2) The constant force springs on core #2 and core #3 shall be earthed via a 750mA fuse. These fuses shall be used for the purposes of counting fuse-operations (checked during daily inspections). A 1500mA fuse shall be used on the line sides of core #2 and core #3 to protect the supply in the event of a product failure (e.g. flashover).

f) The electrical performance of core #1 (i.e. number of 750mA fuse operations on the line side of core #1 – being the core on which the constant force spring is attached for the purpose of leakage current measurement) will not be considered during the evaluation of the test results.

g) Only the core (i.e. either core #2 or core #3 of termination #1) having the most fuse operations will be used to rate the overall electrical performance of the 3-phase product. For example, if core #2 has 1 fuse operation and core #3 has 2 fuse operations, then the overall number of fuse operations will be regarded as 2 (not 3).

Note: Only if one individual core has more than 3 fuse operations will the product fail from an electrical performance perspective.

h) The termination #2 will be used for the purposes of the material performance.

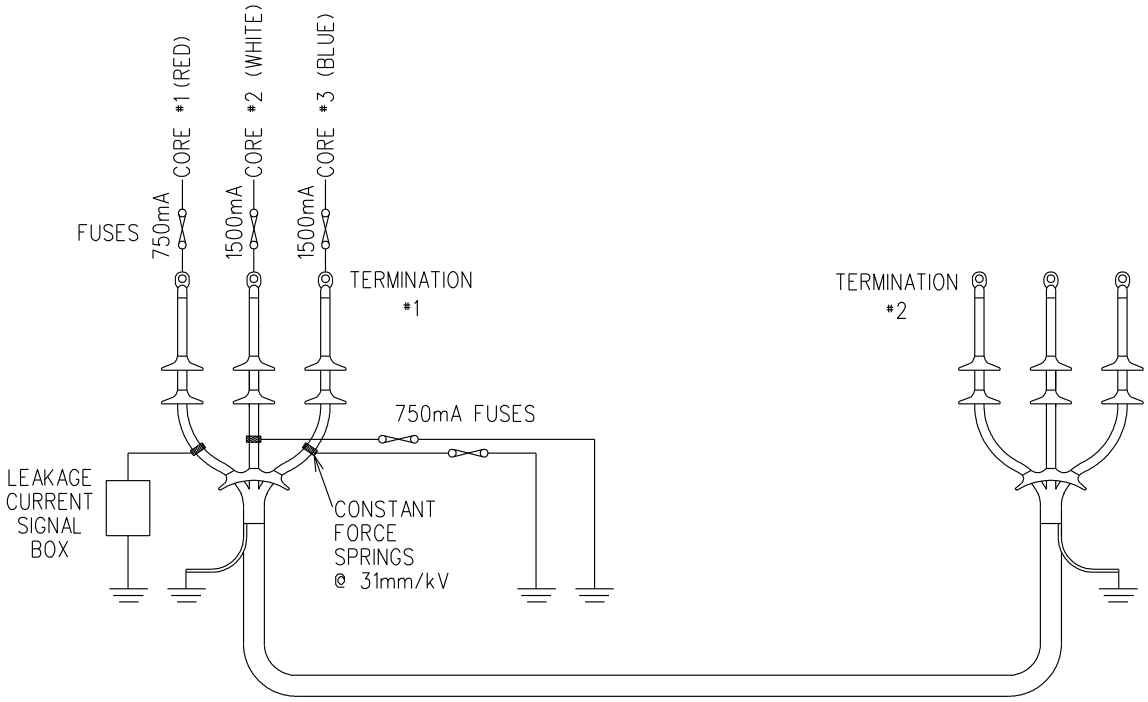

Figure 1: Test set-up configuration for cable terminations

ESKOM COPYRIGHT PROTECTED

When downloaded from the WEB, this document is uncontrolled and the responsibility rests with the user to ensure it is in line with the authorized version on the WEB.

4. Authorization

This document has been seen and accepted by:

Name and surname	Designation
P Moyo	Power Delivery Engineering GM
V Singh	Power Plant Technologies Manager
G Strelec	Distribution Insulator Workgroup Chairman

This procedure shall apply throughout Eskom Holdings Limited, its divisions, subsidiaries and entities wherein Eskom has a controlling interest.

5. Revisions

Date	Rev	Compiler	Remarks
May 2016	2	K.Ramharak	Document formatted and updated according to latest template.
March 2010	1	R Kelly	Document formatted and updated according to latest template. 2 Normative references updated. References to NRS 053 and NRS 012 now included 4.1.2 The terminations to be tested shall be in accordance with NRS 053. However, they shall have a termination tail length of 650mm (as defined in NRS 012), two rain sheds per individual core and a tri-shed near the crutch. Torque shear connector lugs shall be used. Terminations that do not comply with these requirements shall be disqualified and shall not be tested. **NOTE:** The tri-shed is applicable to terminations for paper-insulated cable only. 4.1.3 Termination components (specifically with outer core tubing, rain sheds and break-out boot) shall be fully marked by the manufacturer in accordance with the requirements of NRS 053. Terminations supplied with unmarked outer core tubing, rain sheds and break-out boots shall be disqualified and shall not be tested. 4.4.1 Terminations not complying with the requirements stipulated in 4.1 shall be disqualified and shall not be tested.

ESKOM COPYRIGHT PROTECTED

When downloaded from the WEB, this document is uncontrolled and the responsibility rests with the user to ensure it is in line with the authorized version on the WEB.

Date	Rev	Compiler	Remarks
Dec 2006	0		Doc 34-211 Updated various Eskom document references Updated various IEC and SABS document references (IEC/SABS to SANS) 4.2.1 Definition of product range (group) modified. 4.2.2 Scope / range of approval conditions added / clarified. 4.3.2 Reference to Figures A.1 and A.2 added 4.3.3 Clause 2.3.3 added detailing requirements for provision to be made for the installation of constant force springs used to measure the relevant leakage currents. Annex A Figures A.1 and A.2 added for KIPTS cable termination support brackets. Test procedure requirements and figure 1 added.
Nov 2001	0		Original document. – SCSPVAC18

6. Development team

The following people were involved in the development of this document:

- Rhett Kelly
- Wallace Vosloo
- Greg Whyte (original issue)

7. Acknowledgement

Not applicable

ESKOM COPYRIGHT PROTECTED

When downloaded from the WEB, this document is uncontrolled and the responsibility rests with the user to ensure it is in line with the authorized version on the WEB.

Annex A – KIPTS cable termination support brackets

(Normative)

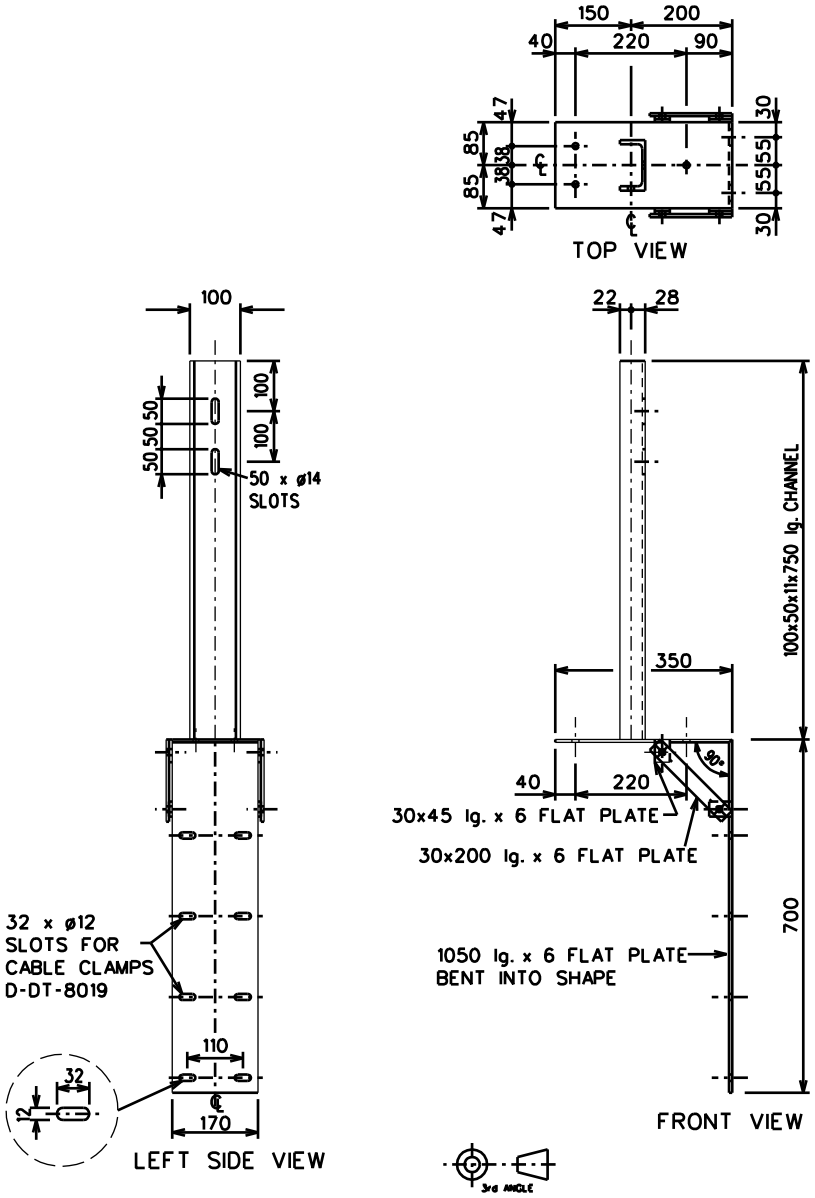

NOTES :
1. MATERIAL GRADE 300W STEEL TO SANS 1431, HOT DIPPED GALVANISED TO SANS 121.
2. ALL HOLES TO BE 12mm DIAMETER UNLESS OTHER WISES SHOWN.
3. ITEMS NOT BOLTED TOGETHER ARE TO BE WELDED WITH 5mm CONTINUOUS SEAL WELD TO CONFORM TO SANS 0162-11.
4. TWO CABLE SUPPORT CLAMPS IN ACCORDANCE WITH D-DT-8019 TO BE SUPPLIED WITH BRACKET.

Figure A.1: KIPTS cable termination support bracket (main)

ESKOM COPYRIGHT PROTECTED

When downloaded from the WEB, this document is uncontrolled and the responsibility rests with the user to ensure it is in line with the authorized version on the WEB.

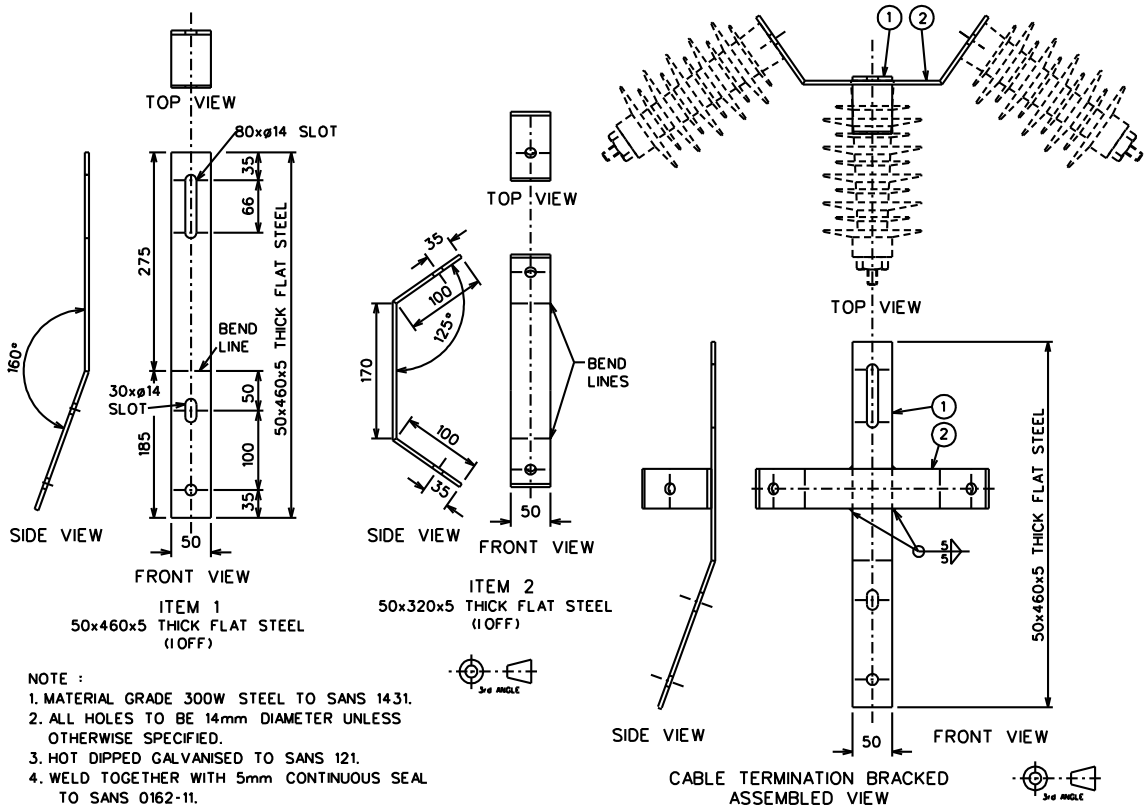

Figure A.2: KIPTS cable termination second bracket for mounting stand-off post insulators

ESKOM COPYRIGHT PROTECTED

When downloaded from the WEB, this document is uncontrolled and the responsibility rests with the user to ensure it is in line with the authorized version on the WEB.

Annex B – Impact Assessment

(Informative)

Impact assessment form to be completed for all documents.

1) Guidelines

- All comments must be completed.
- Motivate why items are N/A (not applicable)
- Indicate actions to be taken, persons or organisations responsible for actions and deadline for action.
- Change control committees to discuss the impact assessment, and if necessary give feedback to the compiler of any omissions or errors.

2) Critical points

2.1 Importance of this document. E.g. is implementation required due to safety deficiencies, statutory requirements, technology changes, document revisions, improved service quality, improved service performance, optimised costs.

Comment: KIPTS testing is mandatory for all outdoor MV cable accessories.

2.2 If the document to be released impacts on statutory or legal compliance - this need to be very clearly stated and so highlighted.

Comment: N/A – no changes to the test procedure not any impact on statutory or legal compliance.

2.3 Impact on stock holding and depletion of existing stock prior to switch over.

Comment: N/A – this is a test procedure.

2.4 When will new stock be available?

Comment: N/A – this is a test procedure.

2.5 Has the interchangeability of the product or item been verified - i.e. when it fails is a straight swop possible with a competitor's product?

Comment: N/A – this is a test procedure.

2.6 Identify and provide details of other critical (items required for the successful implementation of this document) points to be considered in the implementation of this document.

Comment: N/A – this is a test procedure.

2.7 Provide details of any comments made by the Regions regarding the implementation of this document.

Comment: (N/A during commenting phase)

3) Implementation timeframe

3.1 Time period for implementation of requirements.

Comment: The document is to implemented upon publication.

3.2 Deadline for changeover to new item and personnel to be informed of DX wide change-over.

Comment: N/A – this is a test procedure.

ESKOM COPYRIGHT PROTECTED

When downloaded from the WEB, this document is uncontrolled and the responsibility rests with the user to ensure it is in line with the authorized version on the WEB.

4) Buyers Guide and Power Office

4.1 Does the Buyers Guide or Buyers List need updating?

Comment: N/A – this is a test procedure.

4.2 What Buyer's Guides or items have been created?

Comment: N/A – this is a test procedure.

4.3 List all assembly drawing changes that have been revised in conjunction with this document.

Comment: N/A – this is a test procedure.

4.4 If the implementation of this document requires assessment by CAP, provide details under 5

4.5 Which Power Office packages have been created, modified or removed?

Comment: N/A – this is a test procedure.

5) CAP / LAP Pre-Qualification Process related impacts

5.1 Is an ad-hoc re-evaluation of all currently accepted suppliers required as a result of implementation of this document?

Comment: No.

5.2 If NO, provide motivation for issuing this specification before Acceptance Cycle Expiry date.

Comment: The document is due for revision and there are not technical changes.

5.3 Are ALL suppliers (currently accepted per LAP), aware of the nature of changes contained in this document?

Comment: No – it is only relevant for those who still need to test their products in future.

5.4 Is implementation of the provisions of this document required during the current supplier qualification period?

Comment: No. LAP listed products have already been evaluated based upon KIPTS testing.

5.5 If Yes to 5.4, what date has been set for all currently accepted suppliers to comply fully?

Comment: N/A

5.6 If Yes to 5.4, have all currently accepted suppliers been sent a prior formal notification informing them of Eskom's expectations, including the implementation date deadline?

Comment: N/A

5.7 Can the changes made, potentially impact upon the purchase price of the material/equipment?

Comment: No.

5.8 Material group(s) affected by specification: (Refer to Pre-Qualification invitation schedule for list of material groups)

Comment: Cable Accessories – Joints and Termination Kits - MV

6) Training or communication

6.1 Is training required?

Comment: NO

ESKOM COPYRIGHT PROTECTED

When downloaded from the WEB, this document is uncontrolled and the responsibility rests with the user to ensure it is in line with the authorized version on the WEB.

7) Special tools, equipment, software

7.1 What special tools, equipment, software, etc will need to be purchased by the Region to effectively implement?

Comment: N/A – this is a test procedure.

7.2 Are there stock numbers available for the new equipment?

Comment: N/A – this is a test procedure.

7.3 What will be the costs of these special tools, equipment, software?

8) Finances

8.1 What total costs would the Regions be required to incur in implementing this document? Identify all cost activities associated with implementation, e.g. labour, training, tooling, stock, obsolescence

Comment:

N/A – this is a test procedure……

……

……

Impact assessment completed by:

Name: R A Kelly

Designation: Chief Engineer

ESKOM COPYRIGHT PROTECTED

When downloaded from the WEB, this document is uncontrolled and the responsibility rests with the user to ensure it is in line with the authorized version on the WEB.